Product Document

Published by
ams OSRAM Group

Eval Kit Manual

AS3715

Standard Board

AS3715-WL-ES_EK_ST

Table of Contents

1 Introduction

This document describes the AS3715 Evaluation Kit.

The AS3715 is a compact System PMU supporting two Li-Ion batteries and up to 14 power rails. It futures 3 DCDC buck converts, 1 DCDC buck controller, 5V HDMI booster, HV backlight boost controller with 2 current sinks as well as 8 low noise LDOs. The different regulated supply voltages are programmable via the serial control interface.

AS3715 contains a linear or switch mode Li-Ion battery charger with constant current and constant voltage operation. The maximum charging current is 1.5A. An internal battery switch and an optional external switch are separating the battery during charging or whenever an external power supply is present.

A dual USB input current limiter can be used to control the current taken from the USB supplies or charger inputs. Additional features are a 30V overvoltage protection and JEITA compliant battery temperature supervision with selectable NTC beta values.

The single supply voltage may vary from 2.7V to 5.5V

The Evaluation Kit has to be externally supplied. The graphical user interface (GUI) runs on PC running Windows 7 and allows the user to control the AS3715. Use the enclosed USB cable to connect the PC with the Evaluation board.

The AS3729 is a companion power stage, intended to be used with some AS37xx products.

It cannot be used without a DCDC controller. It contains the power FETs for 2 phases and is capable to handle output currents of 3A per phase.

1.1 Kit Content

Figure 1: Kit Content

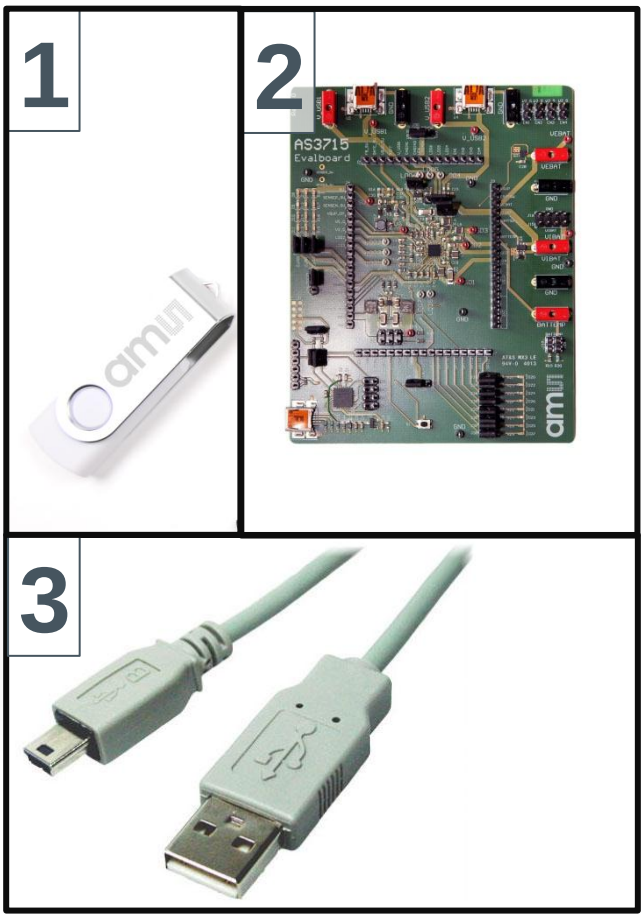

Label	Item	Comment
1	USB flash drive	Includes documents and software
2	Evaluation board	AS3715 (81-pin WL-CSPCTBGA 0.5mm pitch), AS3729 (16-pin WL-CSP 0.4mm pitch)
3	USB connection cable	-

2 Getting Started

Drive the AS3715 and AS3729 only with the recommended settings and values as described in the datasheet. Please check www.ams.com for the latest version.

For a detailed description of the Kit please read sections 3-5 of this document.

- Install the GUI from the attached USB flash drive
- Establish the connection between PC and Evaluation board via the enclosed USB cable
- Connect the battery to VBAT and GND which is included in this kit. Check first if the battery is loaded (~ 3.6 VDC).
- Start the GUI
- If promted **perform a firmware upgrade** on the Evaluation board in order to ensure a proper communication to the GUI! The appropriate firmware file for the Evaluation board comes with the GUI software and can be found in the GUI installation directory
  Never disconnect the battery or interrupt the connection to the PC during the update!!!
- If the AS3715 Evaluation Board is supplied and connected properly to the PC and the appropriate firmware file is installed, the fields at the right bottom corner of the GUI becomes green

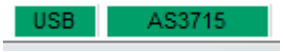

For further information do not hesitate to contact us.

3 Hardware Description

The AS3715 Evaluation Board has to be powered via an external power supply, USB or battery. The AS3715 can be controlled with the onboard µC or any other controller board via 10 pole connector which enables fast code debugging.

Figure 2: Evaluation Board Overview

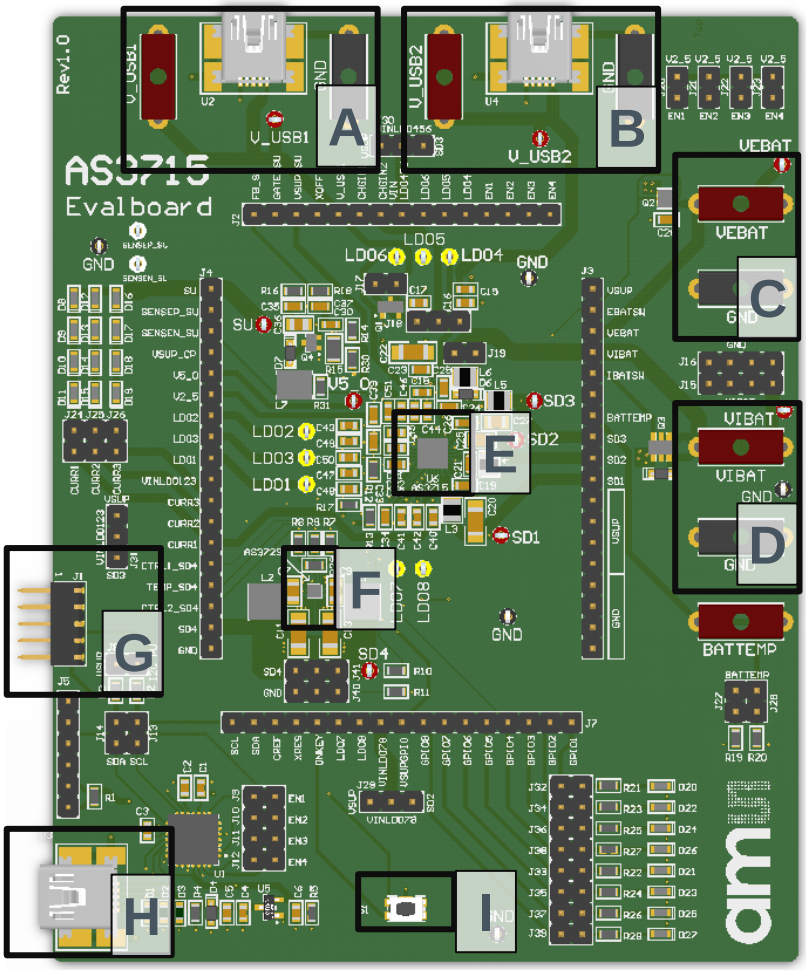

Label	Name	Designator	Description	Info
A	V_USB1	U2, BU1	CHGIN1	Charger adapter input (protected)
B	V_USB2	U4, BU8	CHGIN2	2nd Charger adapter input
C	VEBAT	BU2	VEBAT	External Li-Ion battery connector
D	VIBAT	BU3	VIBAT	Internal Li-Ion battery connector
E	AS3715	U6	PMIC	
F	AS3729	SDxa	Power Stage	
G	J1	J1	Ext. controller	10pole interface for external controller
H	U3	U3	USB Mini B	Interface to the PC
I	S1	S1	ONKEY	Press button for HIGH on ONKEY

Figure 3: Jumper and device locations

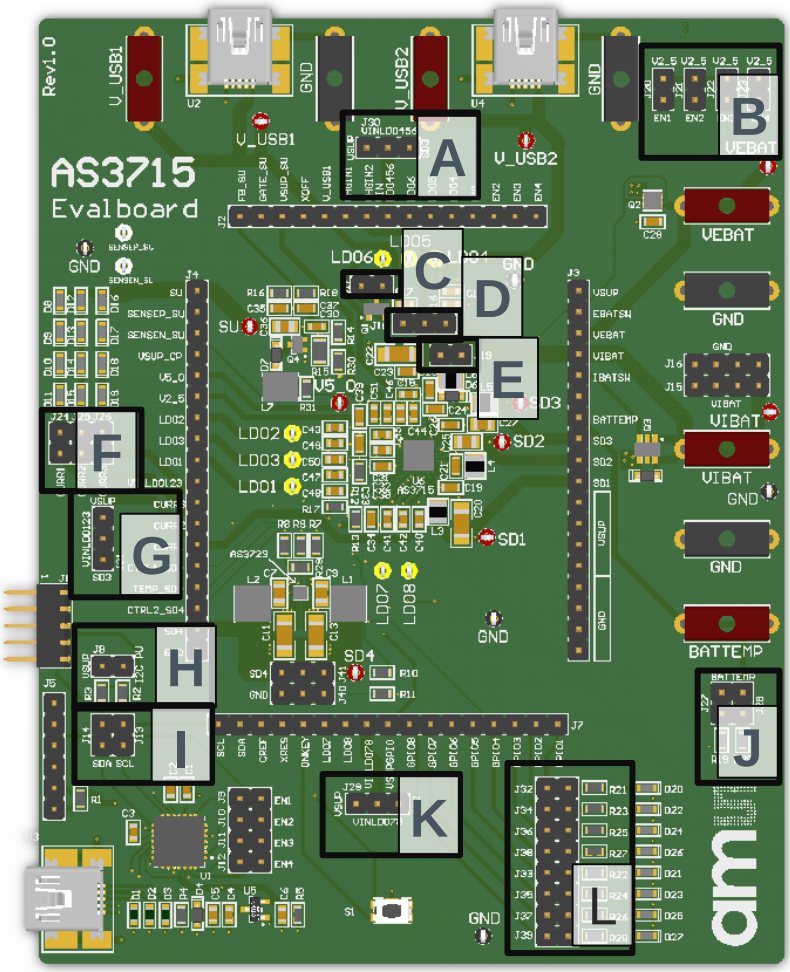

Label	Name	Designator	Description	Info
A	VinLDO456	J30	LDO4,5,6 Supply	VSUP SD3
B	EN1..4	J20, J21, J22, J23	EN HIGH	Place Jumper to connect ENx to 2.5V Supply
C	J17	J17	Short NMOS	Place Jumper to disable overvoltage protection
D	J18	J18	CHGIN2	CHGIN2 connected to CHGIN1 CHGIN2 from V_USB2
E	J19	J19	Linear Mode	Place Jumper if charger is in linear mode. **Remove Jumper in swiched mode! Otherwise AS3715 could be damaged**
F	CURR1..3	J24, J25, J26	Current sinks	Place Jumper to connect Current sinks to Step Up Converter
H	I2C PU	J8	I2C Pullup	Place Jumper to connect I2C Pullup resistors to VSUP

Label	Name	Designator	Description	Info
I	SCL, SDA	J13, J14	I2C Pullup	Place Jumper to connect I2C Interface of onboard uC to AS3715
J	BATTEMP	J27, J28	10k, 15k	Place Jumper to connect 10kOhm and/or 15kOhm resistor to BATTEMP
K	VinLDO78	J29	LDO7,8 Supply	VSUP SD2
L	J32..39	J32..39	GPIO	Place Jumper to connect LED to GPIOx

4 Software Description

The graphical user interface (GUI) is used to control the AS3715 Evaluation board.

Start the GUI and setup the Hardware according section **Error! Reference source not found. Error! Reference source not found.**.

Make sure hardware is recognized and indicators on the bottom right side of the GUI are green colored.

Figure 4: AS3715 Evaluation Software

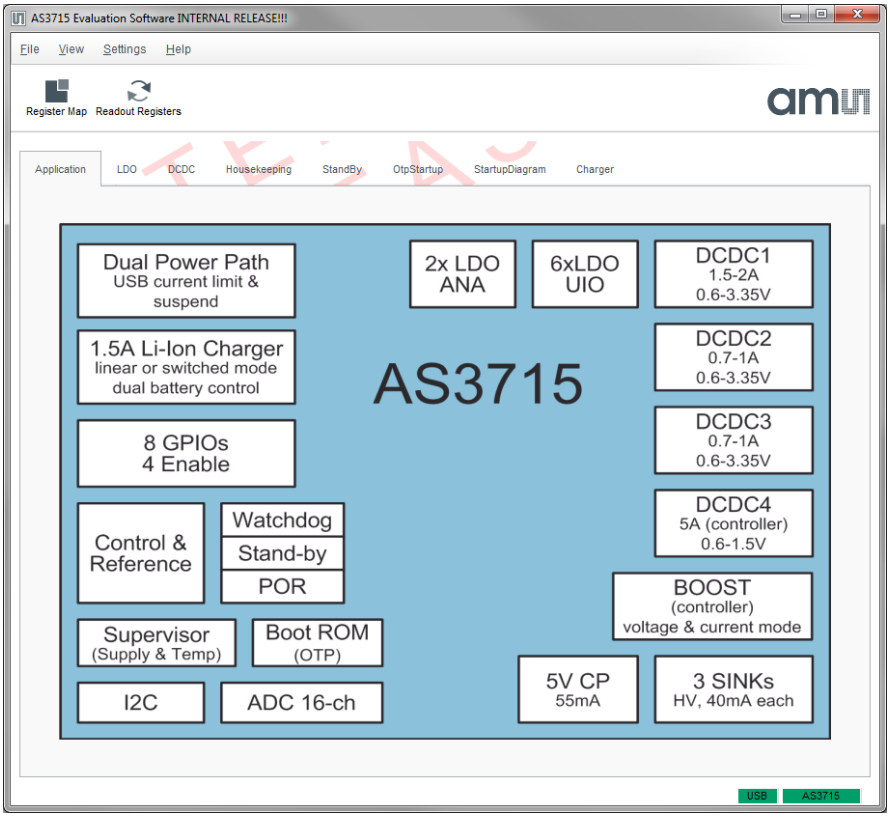

4.1 LDO

The AS3715 features 8 low noise LDO's.

Figure 5: LDO Settings

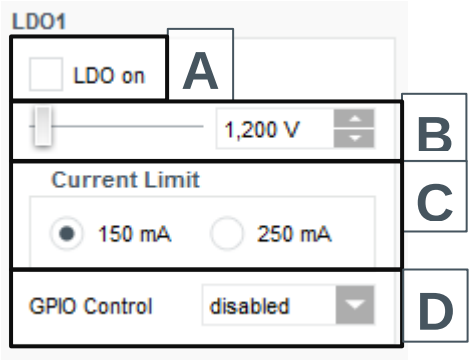

Label	Name	Comment
A	LDO on	Enabling / Disabling of LDOs
B	Vout Regulator	Output voltage
C	Current Limit	Current Limit setting
D	GPIO Control	GPIO controlling of LDOs

4.2 DCDC

4.2.1 BUCK Converter

The AS3715 features 3 DCDC step down regulators.

Figure 6: Settings for step down converter

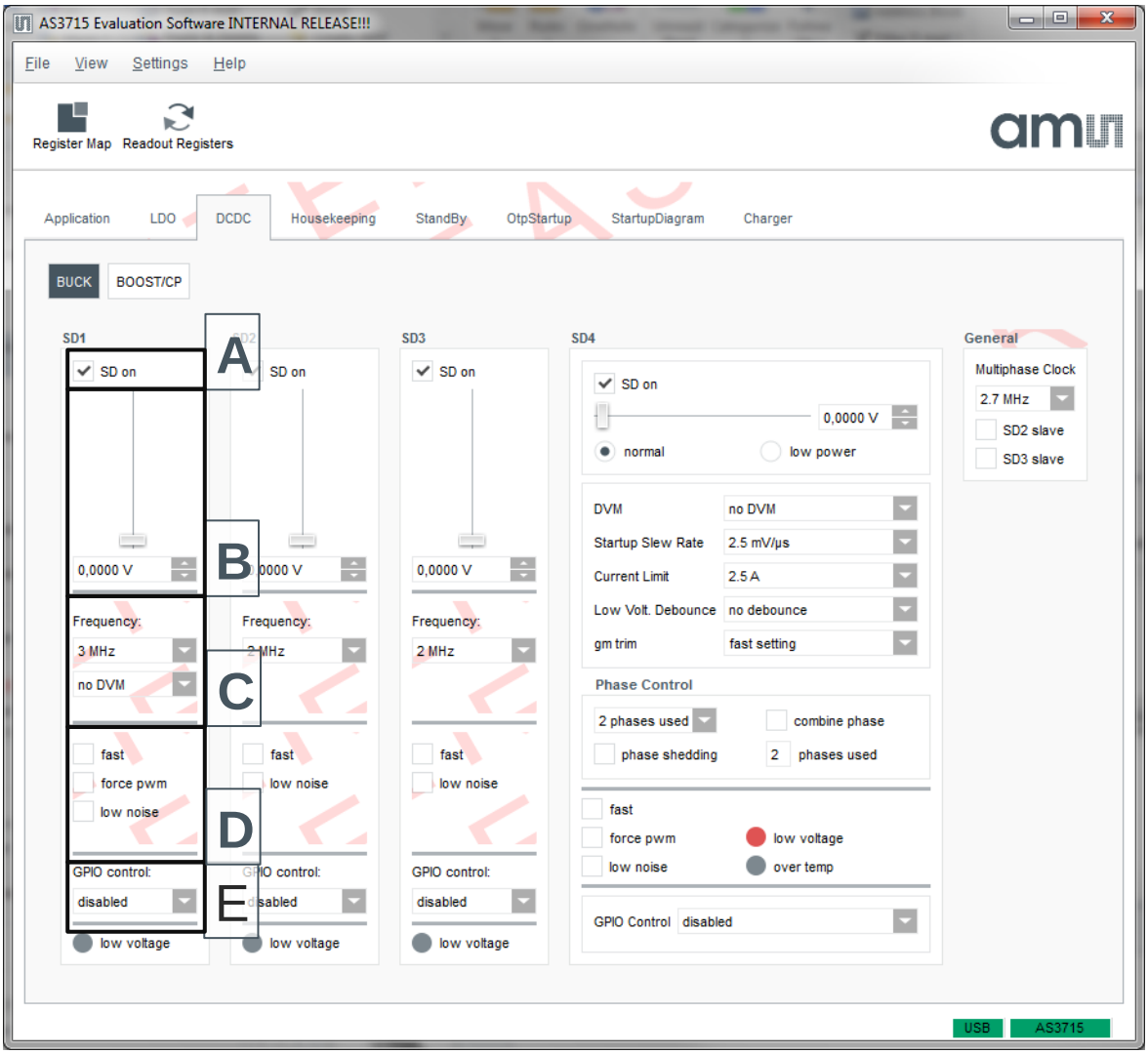

Label	Name	Comment
A	SD on	Enabling / Disabling of DCDCs
B	Vout Regulator	Output voltage
C	Frequency/DVM Control	Select switching frequency
D	Mode Settings	For further details please refer to the AS3715 datasheet. The latest version of the datasheet can be found on our homepage, www.ams.com
E	GPIO Control	GPIO controlling of DCDCs

4.2.2 BUCK Controller

The AS3715 features one DCDC step down controller which is used in combination with the external Power Stage AS3729.

Figure 7: Settings for step down controller

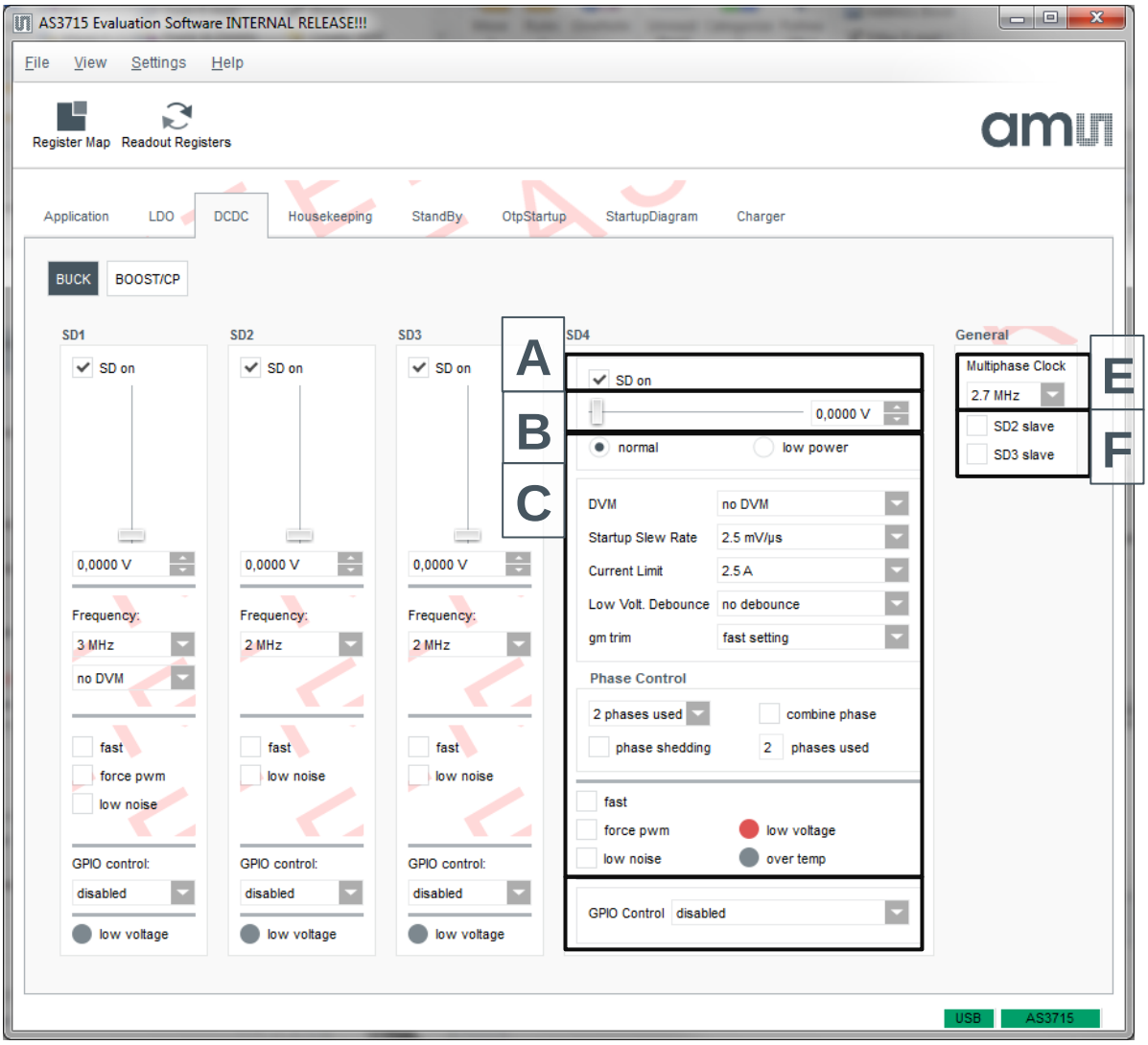

Label	Name	Comment
A	SD on	Enabling / Disabling of DCDC
B	Vout Regulator	Output voltage
C	Mode Settings/ Phase Control	For further details please refer to the AS3715 datasheet. The latest version of the datasheet can be found on our homepage, www.ams.com
D	Frequency/DVM Control	Select switching frequency of SD4
E	Slave Selection	Set SD2/3 as slave converter

4.2.3 BOOST Converter, Charge Pump and Current Sinks

The AS3715 features one 5V Charge Pump, a step up converter and 3 current sinks.

Figure 8: Boost Converter, CP and CS

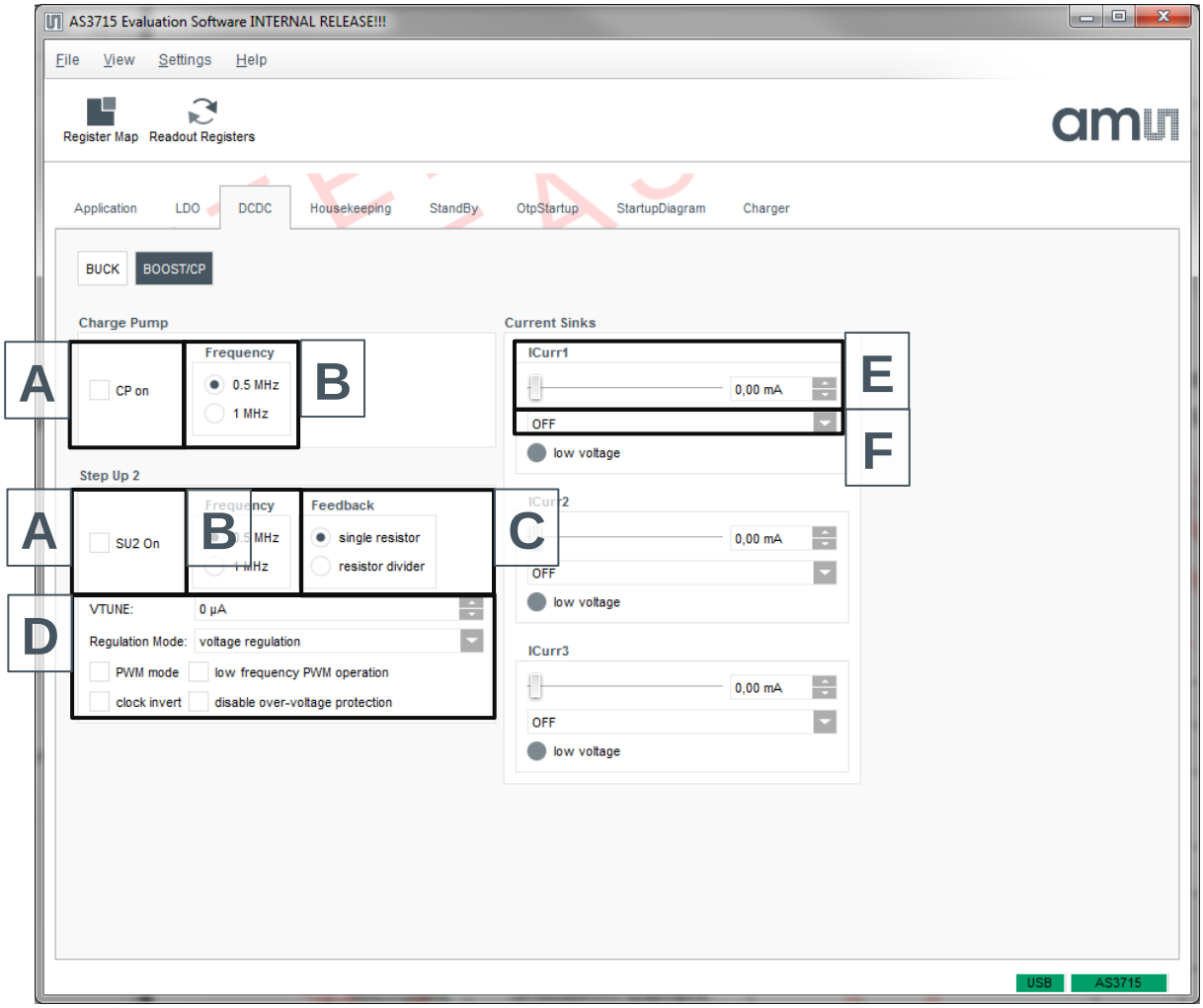

Label	Name	Comment
A	CP/SU on	Enabling / Disabling Charge Pump/Step Up Converter
B	Frequency	Select switching frequency
C	Feedback	Select if one or two resistors are used for feedback voltage
D	Mode Selection	For further details please refer to the AS3715 datasheet. The latest version of the datasheet can be found on our homepage, www.ams.com
E	ICurrX	Select current of sinks
F	Mode	Select mode of current sinks

4.3 Housekeeping

In this section GPIO, Reset/Startup, Interrups, ADC and Supervisor can be defined.

For further details please refer to the AS3715 datasheet. The latest version of the datasheet can be found on our homepage, www.ams.com

Figure 9: Housekeeping

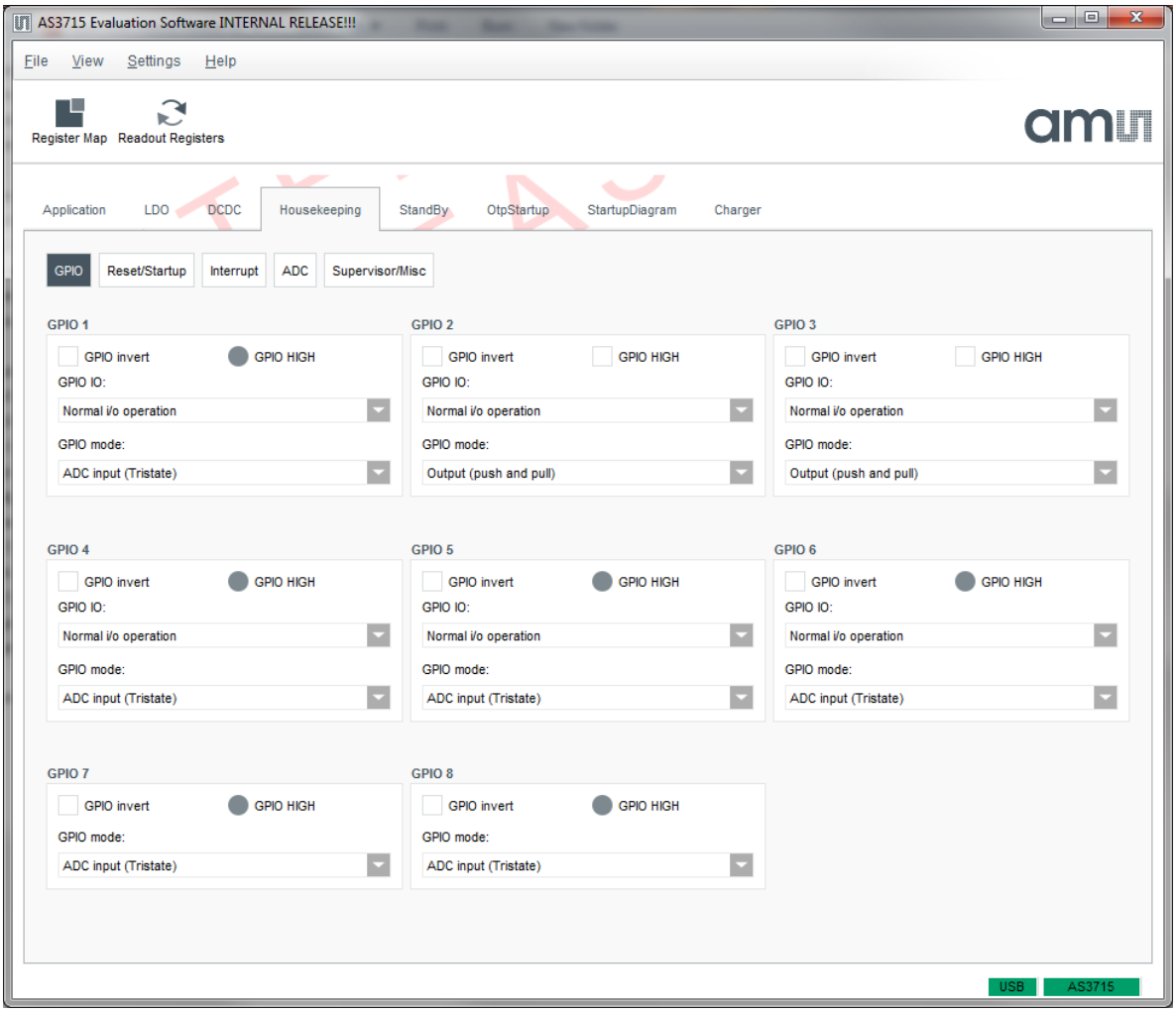

4.4 Standby

This section defines which rails should be enabled in standby mode.

Figure 10: Standby

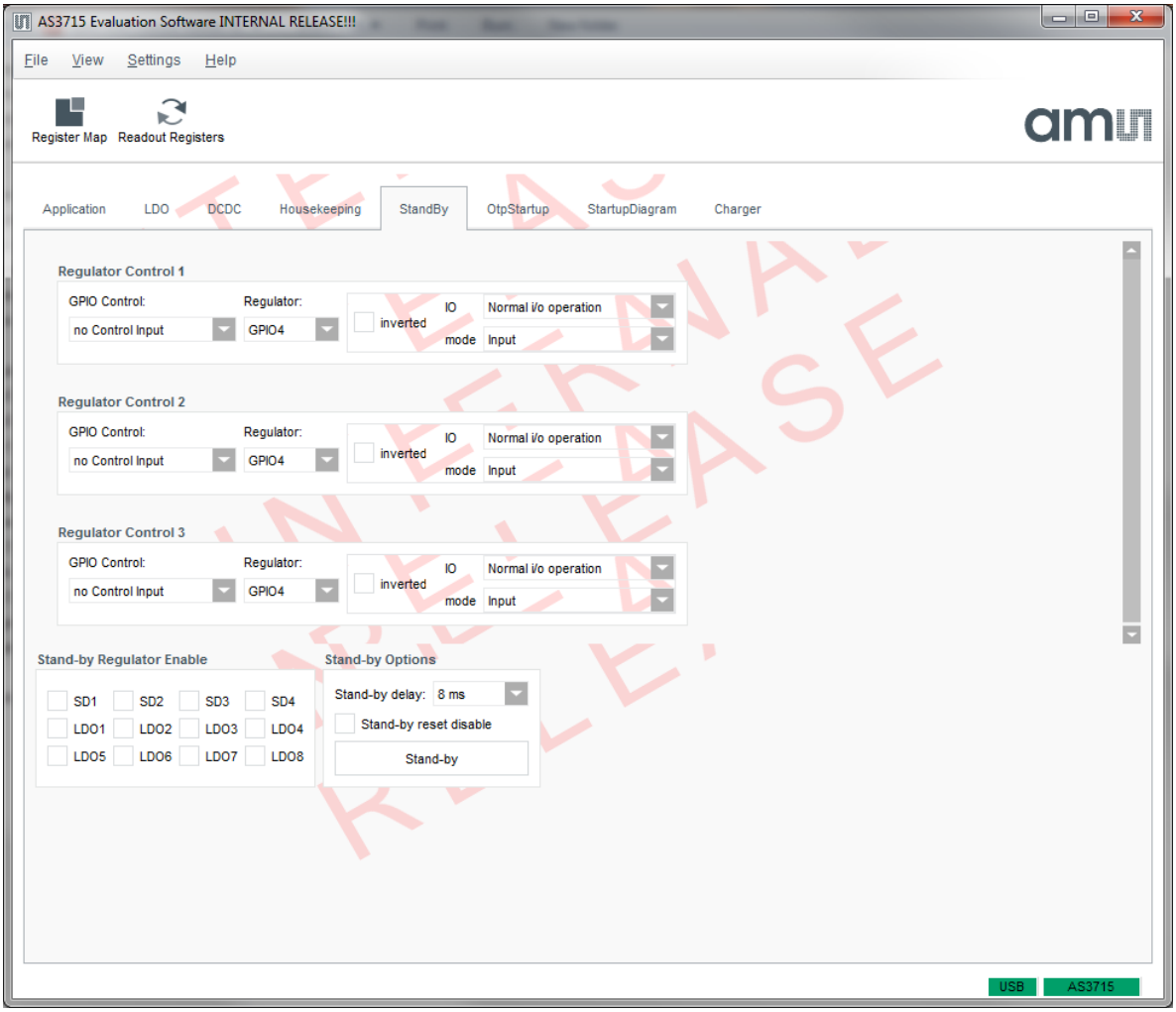

4.5 OtpStartup

This section defines the startup sequence and enables programing of OTP.

Figure 11: OtpStartup

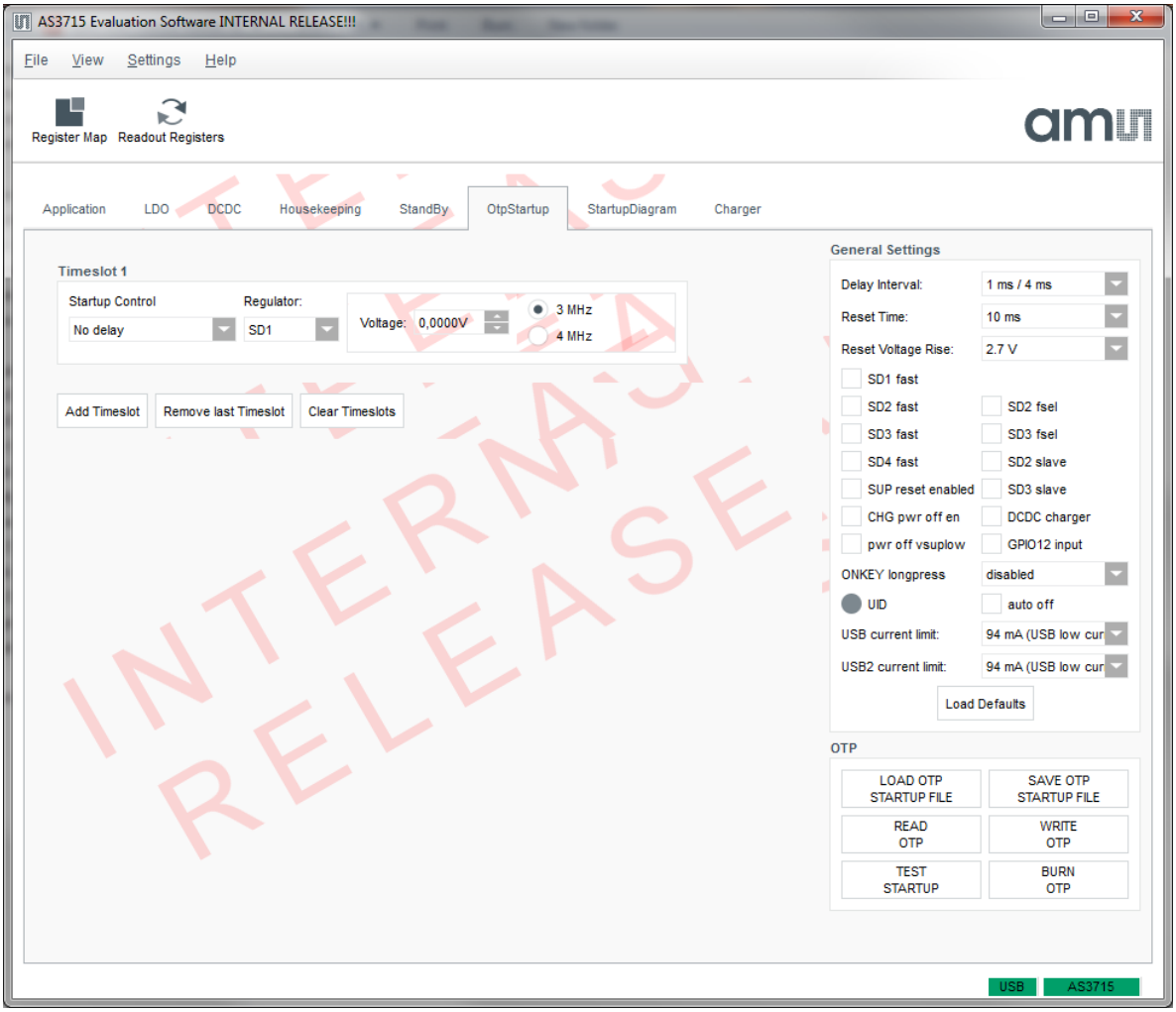

4.6 StartupDiagram

A diagram of the in the OtpStartup section defined values is shown here.

Figure 12: StartupDiagram

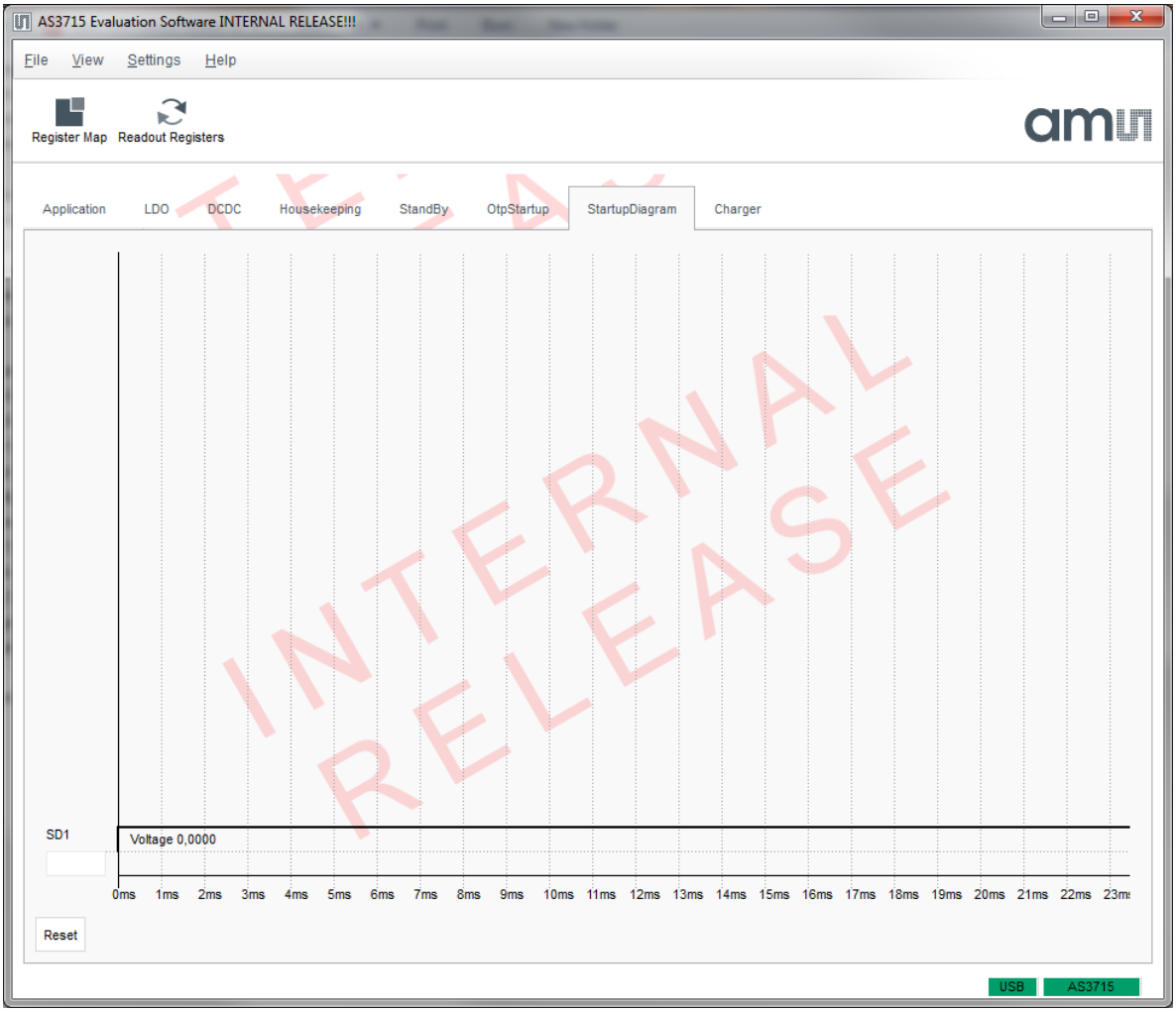

4.7 Charger

In this section the Charger can be defined.

For further details please refer to the AS3715 datasheet. The latest version of the datasheet can be found on our homepage, www.ams.com

Figure 13: Charger

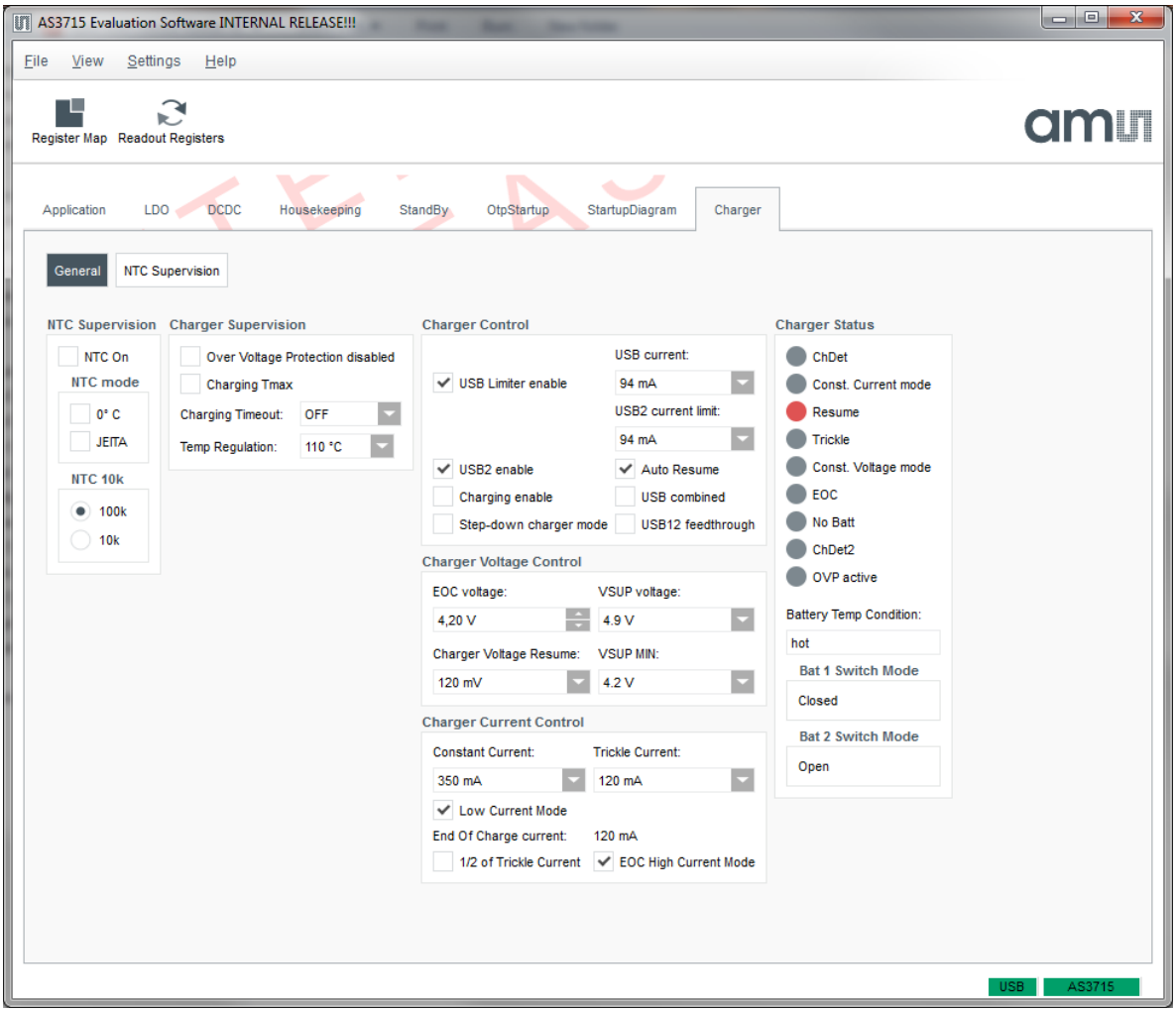

5 Schematics, Layers and BOM

The AS3715 Evaluation Board is a 6-layer HDI board. The main components are the AS3715 together with the Power Stage AS3729 plus additionally some active components, passive components, several test points and connectors.

Figure 14: AS3715 PCB Layer Stack up

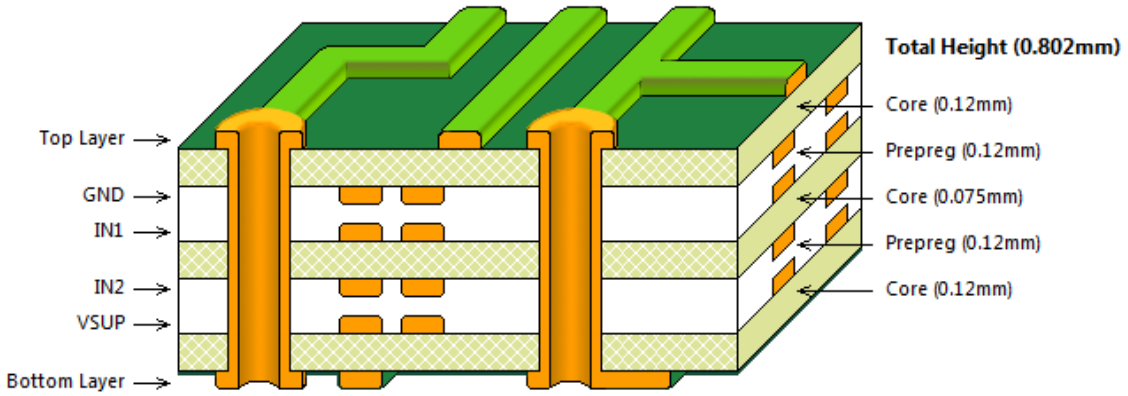

5.1 Schematic of AS3715 Evaluation Boar

Figure 15: Schematic

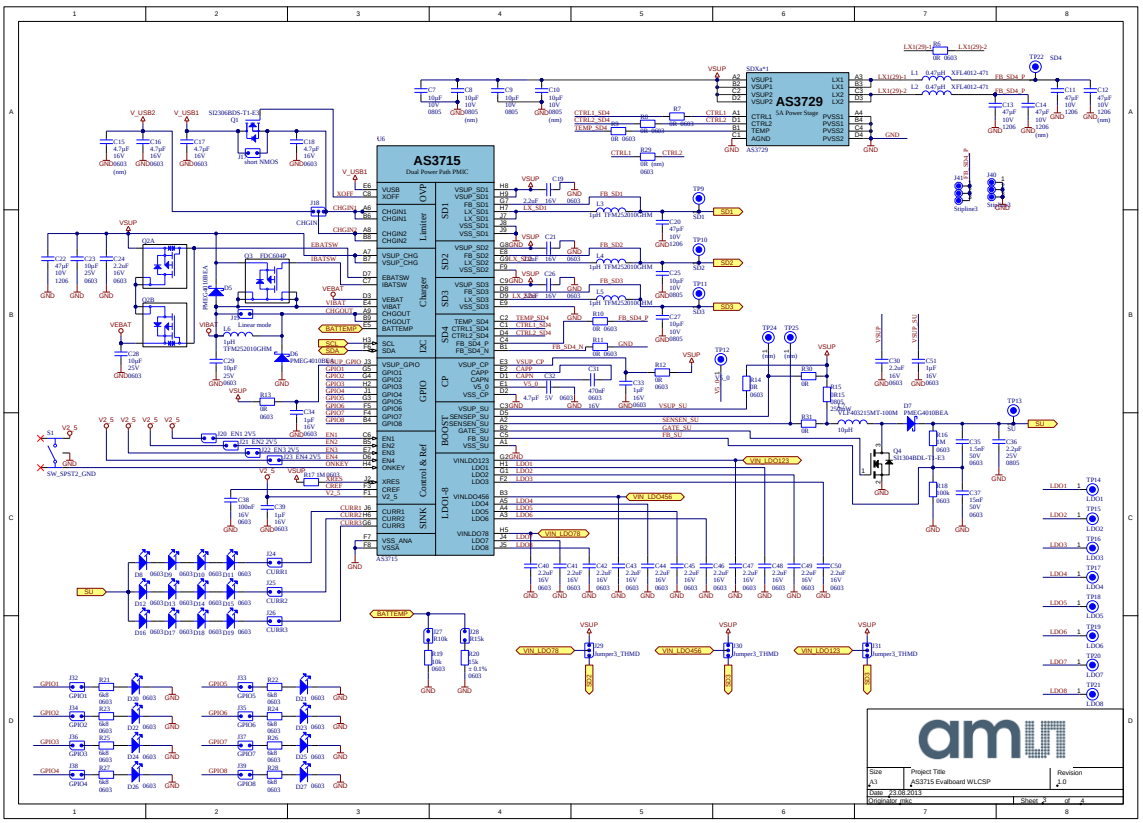

Figure 16: Schematic page 2

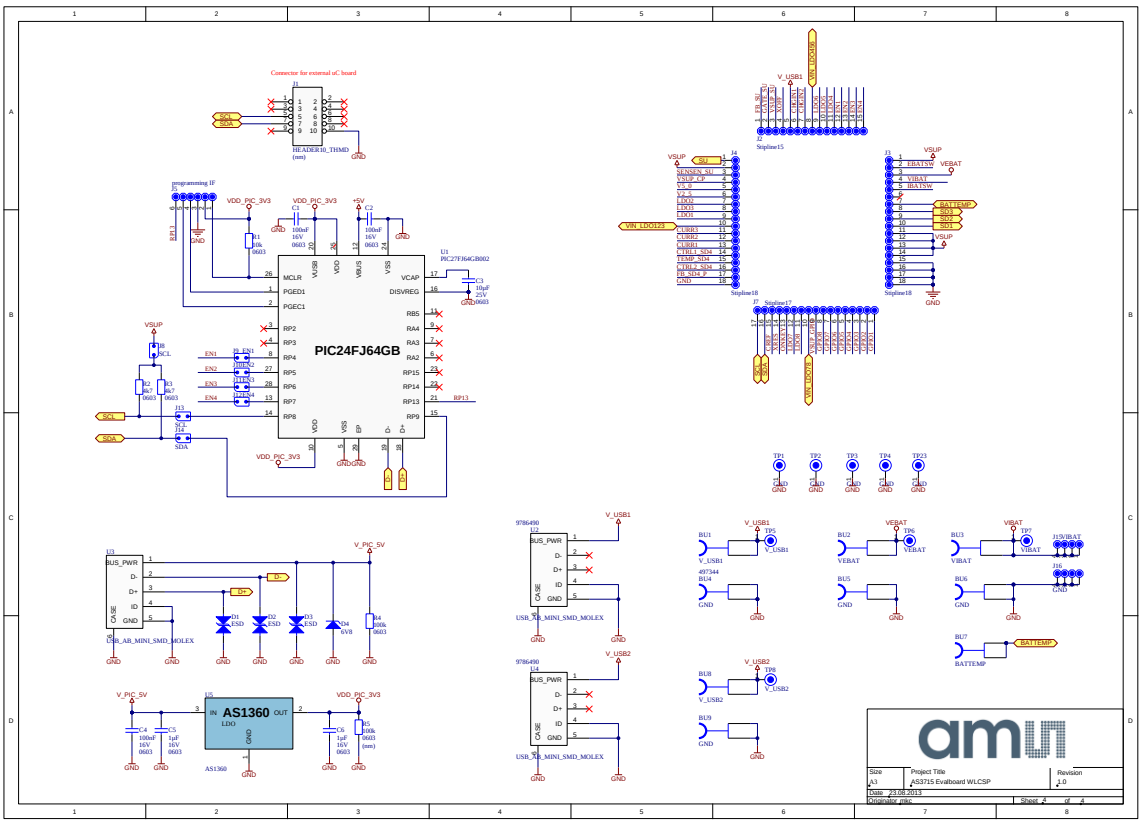

Figure 17: Top Layer

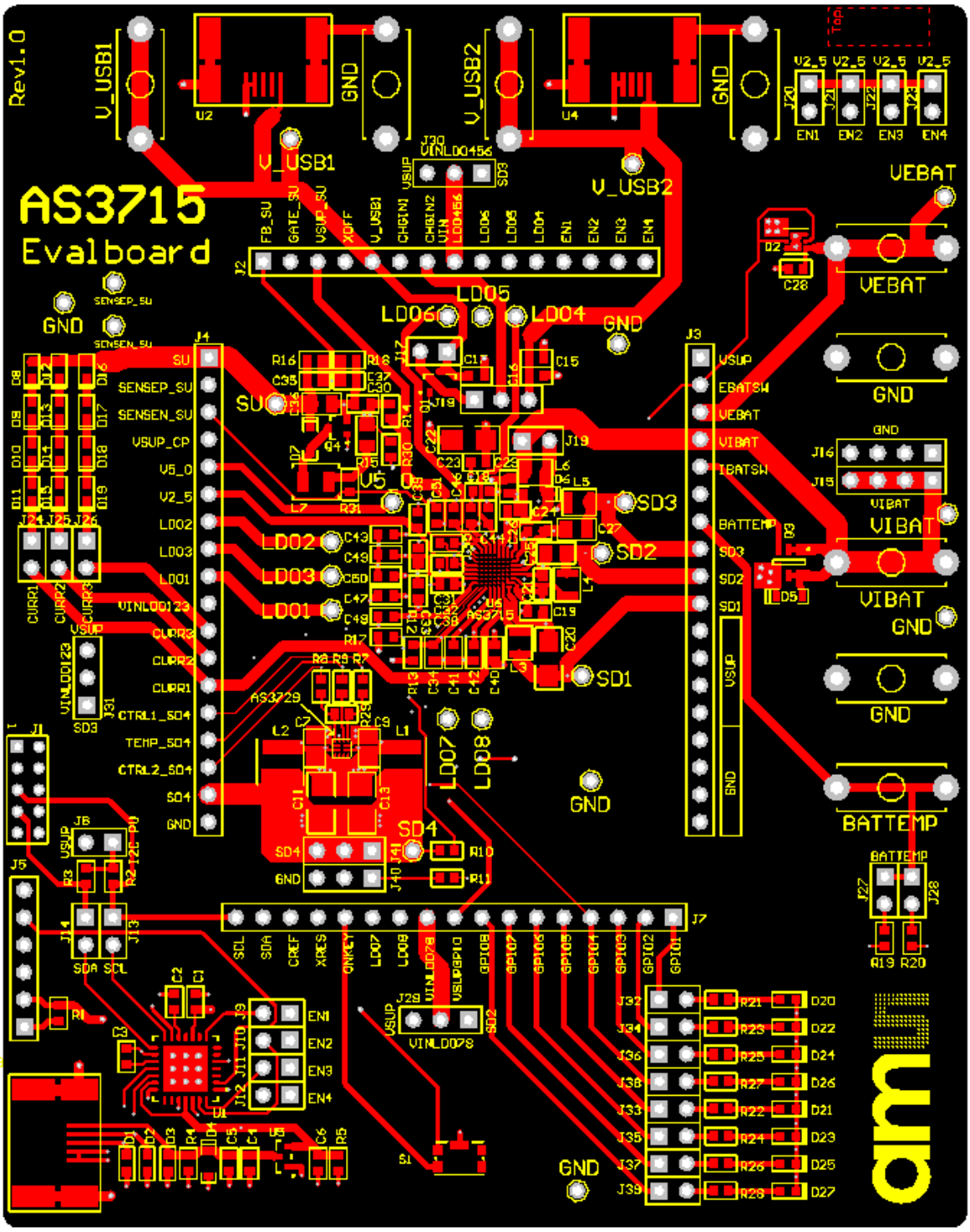

Figure 18: GND

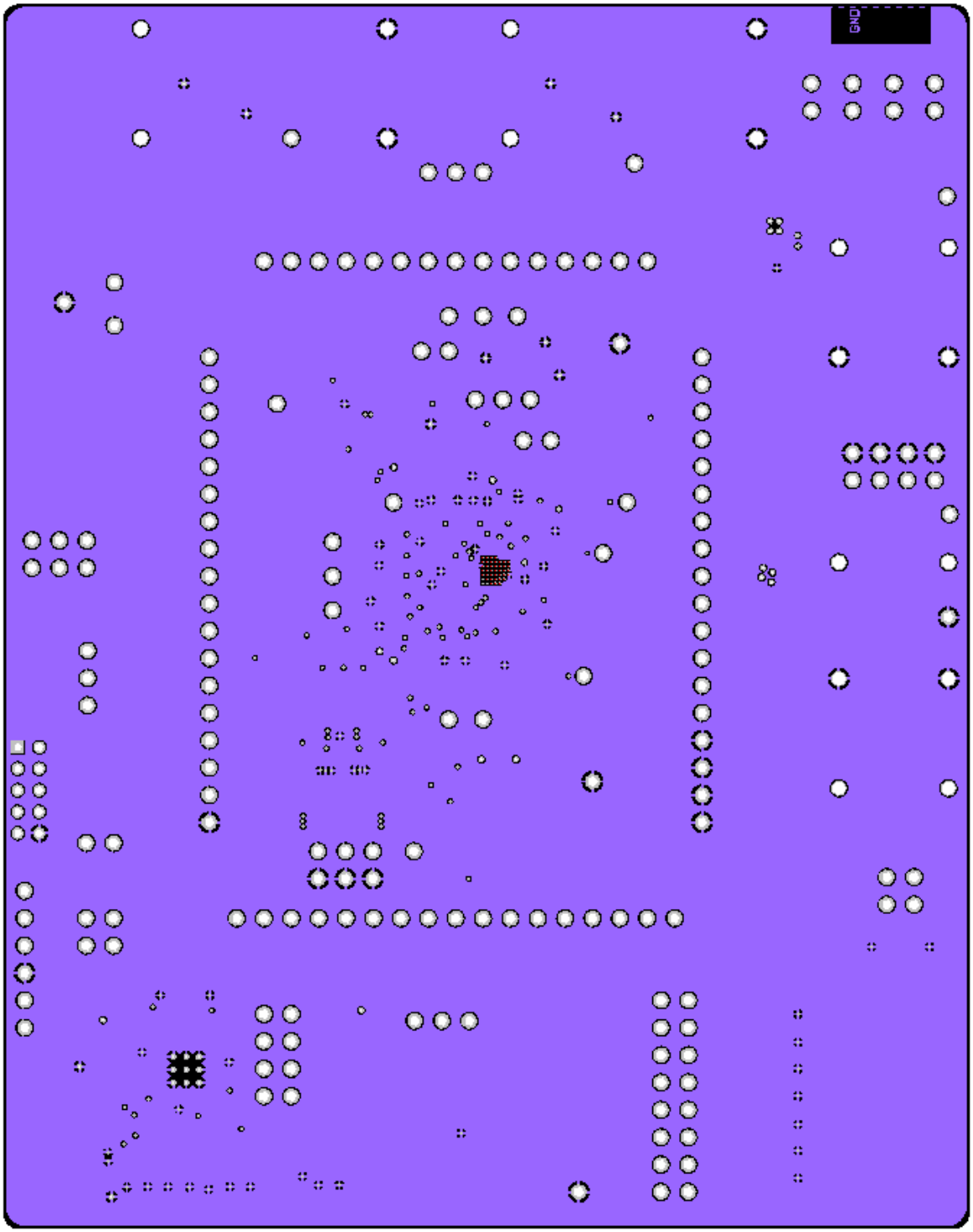

Figure 19: IN1

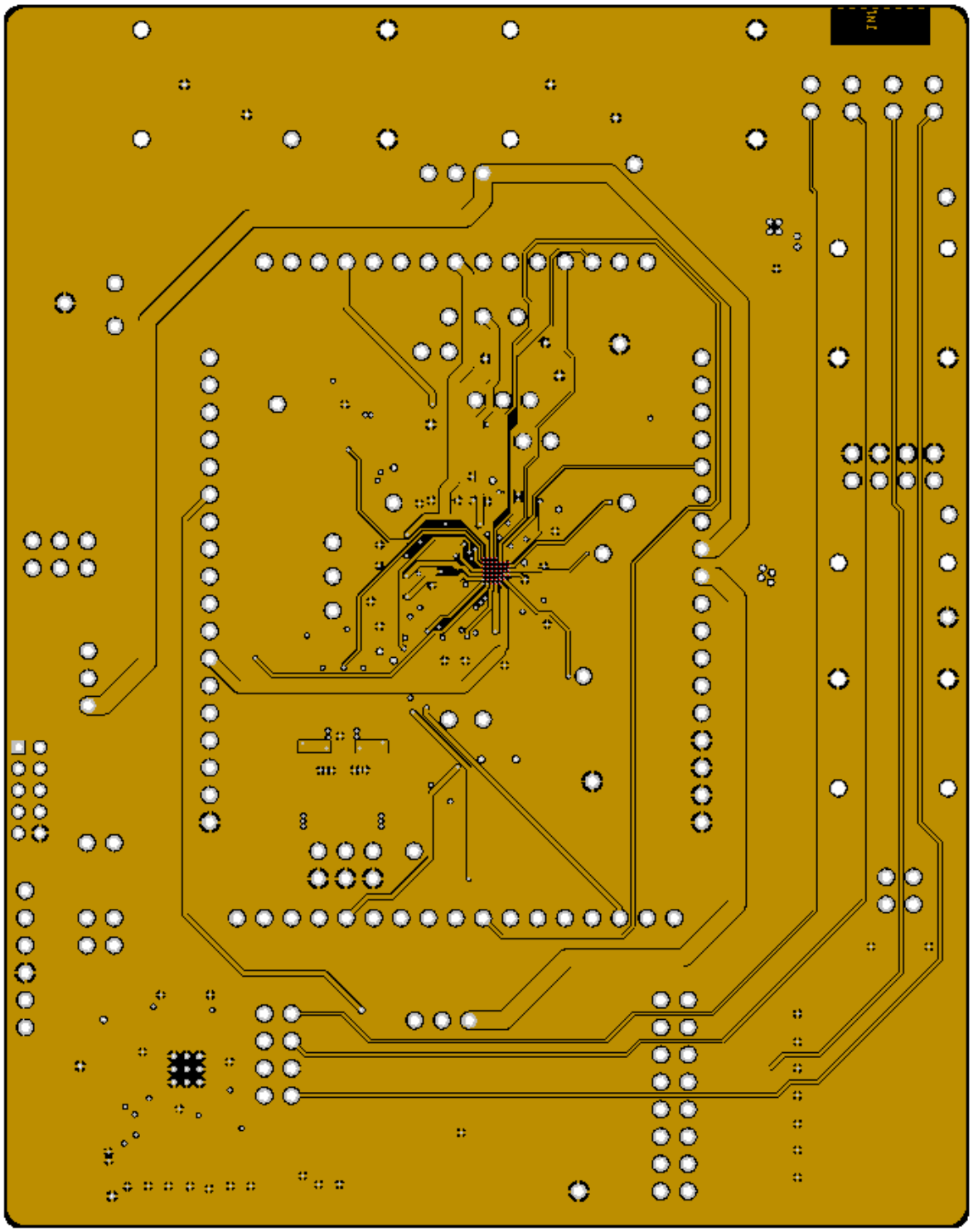

Figure 20: IN2

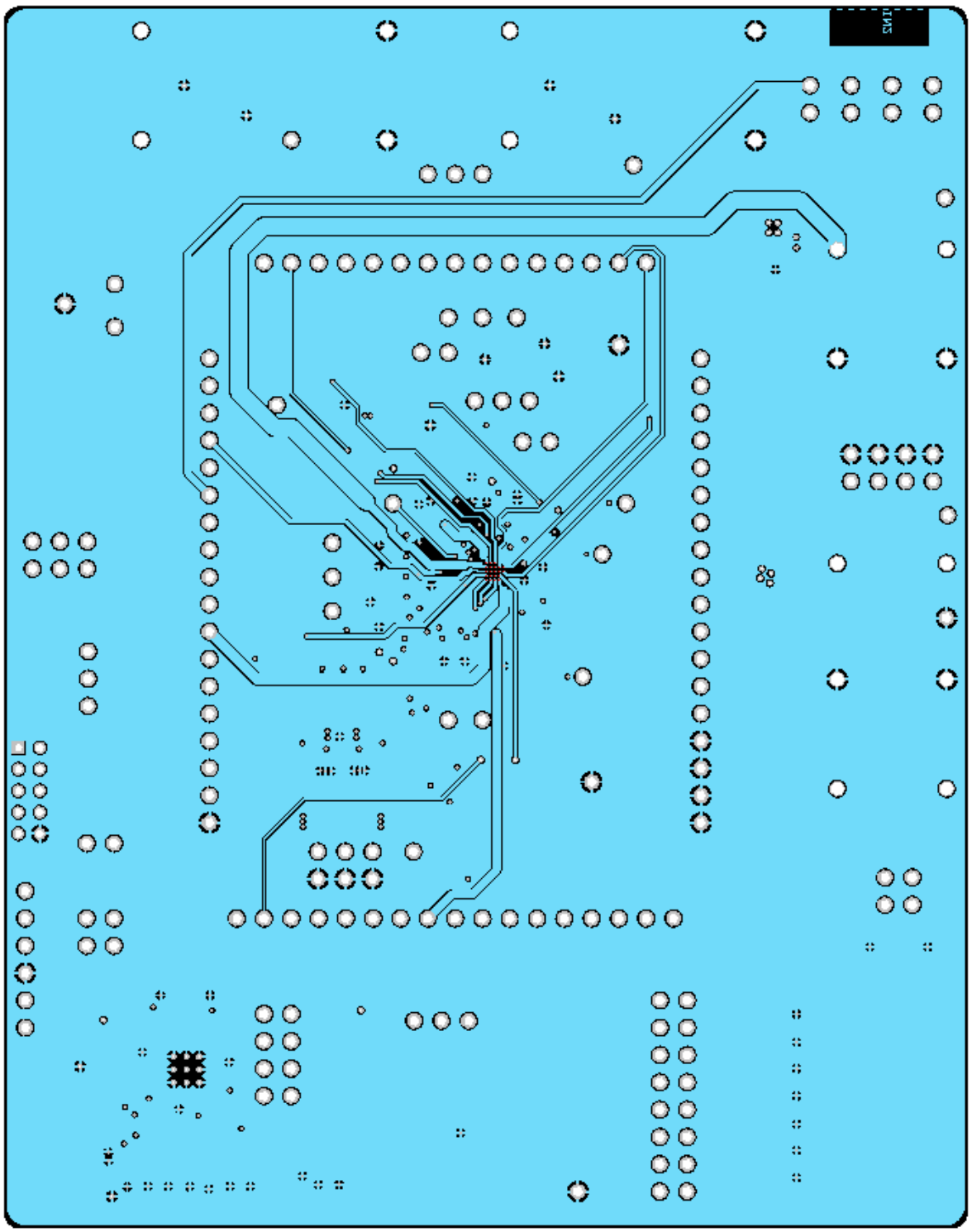

Figure 21: VSUP

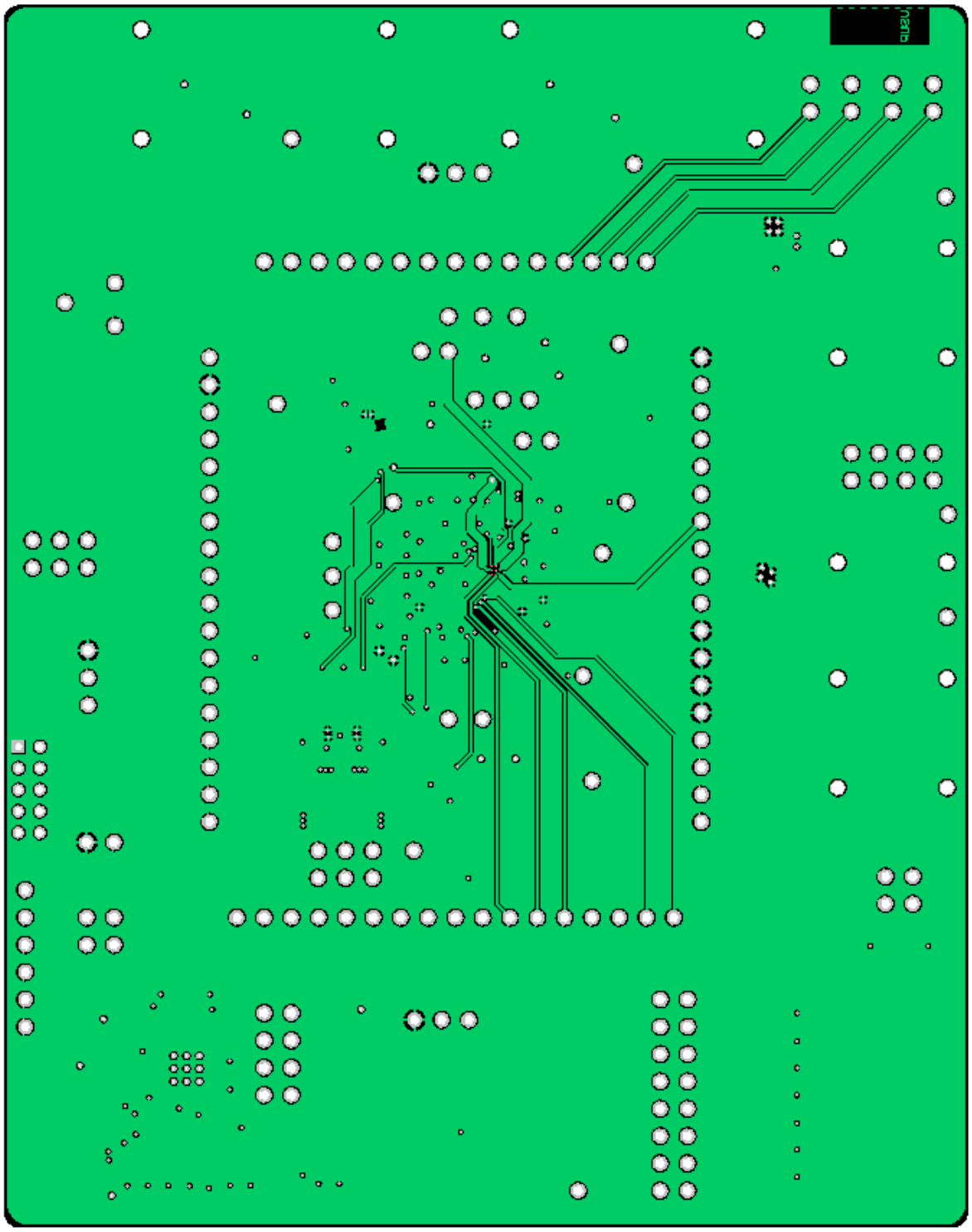

Figure 22: Bottom Layer

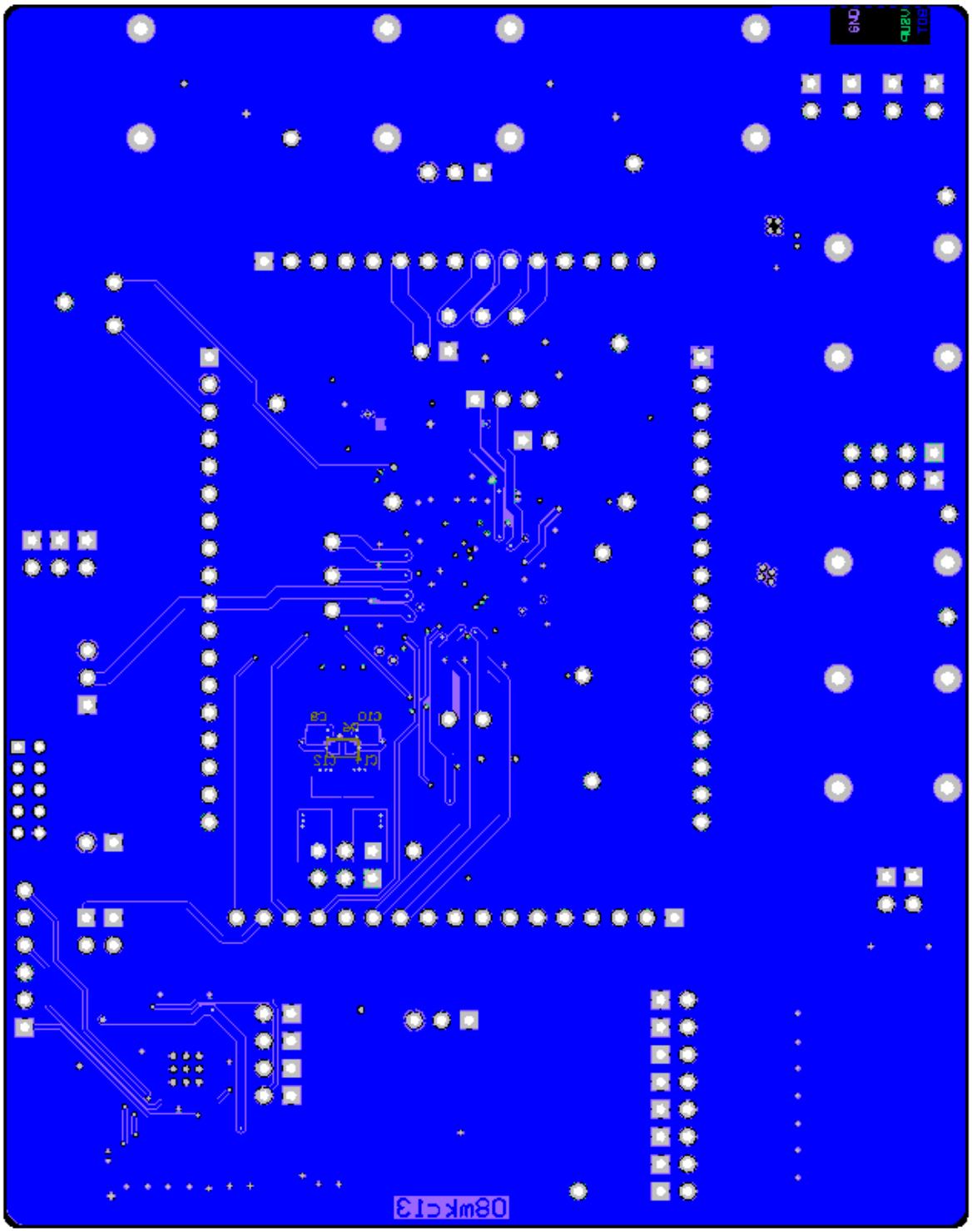

5.2 BOM

Figure 23: Bill of Material

Bill of Materials

AS3715 Evalboard WLCSP

Company:	ams AG
Originator:	mkc
PCB Name:	AS3715 Evalboard WLCSP
PCB Version:	1.0
Report Date:	23.08.2013

#	Designator	Comment	Component_Description	Manufacturer	Manufacturer Part Number	Supplier 1	Supplier Part Number 1	Quantity
1	BU1, BU2, BU3, BU7, BU8	V_USB1, VEBAT, VIBAT, BATTEMP,	HIRSCHMANN TEST AND	HIRSCHMANN TEST AND	930234101	Farnell	497344, 497150, 497150, 497150,	5
2	BU4, BU5, BU6, BU9	GND	HIRSCHMANN TEST AND	HIRSCHMANN TEST AND	973582100	Farnell		4
3	C1, C2, C4, C38	100nF	CAP CER 100nF 16V 10%	Murata Electronics North	GRM188R71C104KA01D	Digi-Key	490-1532-6-ND	4
4	C3, C23, C28, C29	10µF	CAP CER 10UF 25V 20%	Murata Electronics North	GRM188R61E106MA73D	Digi-Key	490-7202-1-ND	4
5	C5, C6, C33, C34, C39, C51	1µF	CAP CER 1UF 16V 20% X5R	Murata Electronics North	GRM188R61C105MA93D	Digi-Key	GRM188R61C105MA93D-ND	6
6	C7, C9, C25, C27	10µF	CAP CER 10µF 10V 10%	Murata	GRM219R61A106ME47			4
7	C11, C13, C20, C22	47µF	CAP CER 47uF 10V 10%	Murata Electronics	GRM31CR61A476KE15L	Mouser	81-GRM31CR61A476KE5L	4
8	C16, C17, C18, C32	4.7µF	CAP CER 4.7UF 16V 10%	Murata	GRM188R61C475KAAJD	Mouser	N/A	4
9	C19, C21, C24, C26, C30, C40,	2.2uF	CAP CER 2.2UF 16V 10%	Murata Electronics North	GRM188R61C225KE15D	Digi-Key	490-3296-1-ND	16
10	C31	470nF	CAP CER 0.47UF 16V 10%	Murata Electronics North	GRM188R71C474KA88D	Digi-Key	490-3295-1-ND	1
11	C35	1.5nF	CAP CER 1500PF 50V 10%	Murata Electronics North	GRM188R71H152KA01D	Digi-Key	490-1498-1-ND	1
12	C36	2.2µF	CAP CER 2.2UF 25V 10%	Murata Electronics North	GRM219R61E225KA12D	Digi-Key	490-1701-1-ND	1
13	C37	15nF	CAP CER 0.015UF 50V 10%	Murata Electronics North	GRM188R71H153KA01D	Digi-Key	490-1514-1-ND	1
14	D1, D2, D3	ESD	SUPPRESSOR ESD 24VDC	Cooper Bussmann	0603ESDA-TR1	Digi-Key	283-2535-1-ND	3
15	D4	6V8	DIODE ZENER 6.8V 200MW	ON Semiconductor	MM3Z6V8T1G	Digi-Key	MM3Z6V8T1GOSCT-ND	1
16	D5, D6, D7	D_Schottky_PMEG4010BEA	NXP - PMEG4010BEA -	NXP	PMEG4010BEA	Farnell	8738041	3
17	D8, D9, D10, D11, D12, D13,	LED	LED SUPER RED CLR THIN	Lite-On Inc	LTST-C191KRKT	Digi-Key	160-1447-1-ND	20
18	J2, J3, J4, J7	Stpline15, Stpline18, Stpline18, Stpline17	TE CONNECTIVITY / AMP - 2-	TE CONNECTIVITY / AMP	2-826629-0	Farnell	1580047	4
19	J8, J9, J10, J11, J12, J13, J14,	SCL, EN1, EN2, EN3, EN4, SCL, SDA, short	TE CONNECTIVITY / AMP -	TE CONNECTIVITY / AMP	826629-2	Farnell	3418285	26
20	J15, J16	VIBAT, GND	TE CONNECTIVITY / AMP -	TE CONNECTIVITY / AMP	826629-4	Farnell	3418303	2
21	J18, J29, J30, J31, J40, J41	CHGIN, Jumper3_THMD, Jumper3_THMD,	TE CONNECTIVITY / AMP -	TE CONNECTIVITY / AMP	826629-3	Farnell	3418297	6
22	L1, L2	0.47uH	Coilcraft XFL4012-471ME	Coilcraft	Coilcraft XFL4012-471ME			2
23	L3, L4, L5, L6	1µH	TFM252010GHM-1R0MTAA	TDK	TFM252010GHM-1R0MTAA			4
24	L7	10µH	TDK Woud Ferrite 10µH 20%	TDK	TDK VLF403215MT-100M			1
25	Q1	SI2306BDS-T1-E3 - MOSFET N,SOT-23	VISHAY SILICONIX -	VISHAY SILICONIX	SI2306BDS-T1-E3	Farnell	1470157	1
26	Q2	FDMA1023PZ MOSFET P-CHAN DUAL	MOSFET P-CHAN DUAL	Fairchild Semiconductor	FDMA1023PZ	Digi-Key	FDMA1023PZCT-ND	1
27	Q3	FDC604P	FAIRCHILD	FAIRCHILD	FDC604P	Farnell	9846417	1
28	Q4	SI1304, MOSFET,N KANAL, 30V	VISHAY SILICONIX -	VISHAY SILICONIX	SI1304BDL-T1-E3	Farnell	2101433	1
29	R1, R19	10k	MULTICOMP -	MULTICOMP	MC0063W0603110K	Farnell	9330399	2
30	R2, R3	4k7	MULTICOMP -	MULTICOMP	MC0063W060314K7	Farnell	9331247	2
31	R4, R18	100k	MULTICOMP -	MULTICOMP	MC0063W06031100K	Farnell	2131019	2
32	R6, R7, R8, R9, R10, R11, R12,	0R	MULTICOMP - MC 0.063W	MULTICOMP	MC 0.063W 0603 0R	Farnell	9331662RL	11
33	R15	0R15	PANASONIC -	PANASONIC	ERJ6BSFR15V	Farnell	1717814	1
34	R16, R17	1M	MULTICOMP -	MULTICOMP	MC0063W060311M	Farnell	9330410RL	2
35	R20	15k	PANASONIC -	PANASONIC	ERA3AEB153V	Farnell	1577622RL	1
36	R21, R22, R23, R24, R25, R26,	6k8		MULTICOMP	MC0063W060316K8	Farnell	9331450	8
37	S1	SW_SPST2_GND				Digi-Key	SW415-ND	1
38	SDXa*1	AS3729	5A Power Stage		AS3729			1
39	TP1, TP2, TP3, TP4, TP23	GND	VERO - 20-2137 -	VERO	20-2137	Farnell	8731128	5
40	TP5, TP6, TP7, TP8, TP9, TP10,	V_USB1, VEBAT, VIBAT, V_USB2, SO1,	VERO - 20-313137 -	VERO	20-313137	Farnell	8731144	10
41	TP14, TP15, TP16, TP17, TP18,	LDO1, LDO2, LDO3, LDO4, LDO5, LDO6,	VERO - 20-313139 -	VERO	20-313139	Farnell	8731179	8
42	U1	PIC27FJ64GB002	IC MCU 16BIT 64KB FLASH	Microchip Technology	PIC24FJ64GB002-I/ML	Digi-Key	PIC24FJ64GB002-I/ML-ND	1
43	U2, U3, U4	USB_AB_MINI_SMD_MOLEX	MOLEX - 56579-0576 -	MOLEX	56579-0576	Farnell		3
44	U5	AS1360	LDO		AS1360-33			1
45	U6	AS3715	Dual Power Path PMIC		AS3715			1
Approved			Notes					191

6 Ordering & Contact Information

The AS3715 Evaluation Kit can be ordered via www.ams.com.

Ordering Code	Description
AS3715-WL-ES_EK_ST	AS3715 Eval Kit Standard Board

Buy our products or get free samples online at:

www.ams.com/ICdirect

Technical Support is available at:

www.ams.com/Technical-Support

Provide feedback about this document at:

www.ams.com/Document-Feedback

For further information and requests, e-mail us at:

ams_sales@ams.com

For sales offices, distributors and representatives, please visit:

www.ams.com/contact

Headquarters
ams AG
Tobelbaderstrasse 30
8141 Unterpremstaetten
Austria, Europe

Tel: +43 (0) 3136 500 0
Website: www.ams.com

7 Copyrights & Disclaimer

Copyright ams AG, Tobelbader Strasse 30, 8141 Unterpremstaetten, Austria-Europe. Trademarks Registered. All rights reserved. The material herein may not be reproduced, adapted, merged, translated, stored, or used without the prior written consent of the copyright owner.

Demo Kits, Evaluation Kits and Reference Designs are provided to recipient on an “as is” basis for demonstration and evaluation purposes only and are not considered to be finished end-products intended and fit for general consumer use, commercial applications and applications with special requirements such as but not limited to medical equipment or automotive applications. Demo Kits, Evaluation Kits and Reference Designs have not been tested for compliance with electromagnetic compatibility (EMC) standards and directives, unless otherwise specified. Demo Kits, Evaluation Kits and Reference Designs shall be used by qualified personnel only.

ams AG reserves the right to change functionality and price of Demo Kits, Evaluation Kits and Reference Designs at any time and without notice.

Any express or implied warranties, including, but not limited to the implied warranties of merchantability and fitness for a particular purpose are disclaimed. Any claims and demands and any direct, indirect, incidental, special, exemplary or consequential damages arising from the inadequacy of the provided Demo Kits, Evaluation Kits and Reference Designs or incurred losses of any kind (e.g. loss of use, data or profits or business interruption however caused) as a consequence of their use are excluded.

ams AG shall not be liable to recipient or any third party for any damages, including but not limited to personal injury, property damage, loss of profits, loss of use, interruption of business or indirect, special, incidental or consequential damages, of any kind, in connection with or arising out of the furnishing, performance or use of the technical data herein. No obligation or liability to recipient or any third party shall arise or flow out of ams AG rendering of technical or other services.

8 Revision Information

Initial version 1-00

Changes from 1-00 (2014-Jul) to current revision 1-00 (2014-Jul)				Page
Revision	**Date**	**Owner**	**Description**	
1.00	2014-Jul-24	mkc	Initial release	

Note: Page numbers for the previous version may differ from page numbers in the current revision.