Product Document

Published by
ams OSRAM Group

Application Note

AS7265x Multi Spectral Chipset

Design Considerations

Content Guide

1 General Description 3
2 AS7265x Multispectral Chipset 3
3 Hardware Design Considerations 4
3.1 Pin Description 4
3.2 Typical Schematic 5
3.3 UART Interface 5
3.4 I²C Interface 6
3.5 Light Source Selection 7
3.6 Other Connections 7
3.7 PCB Layout Considerations 7
3.8 Optic Considerations 9
4 Software Design Considerations 9
4.1 Features and Register Structure 9
4.2 I²C Virtual Register Read 10
4.3 I²C Virtual Register Write 11
5 Contact Information 14
6 Copyrights & Disclaimer 15
7 Revision Information 16

1 General Description

This Application Note briefly describes system level design considerations with **ams** AS7265x Multispectral Chipset solution.

2 AS7265x Multispectral Chipset

AS7265x Multispectral Chipset consists of AS72651, AS72652, and AS72653 devices and each device has 6 optical filters so that AS7265x Multispectral Chipset have total 18 channels for spectral identification from 400nm to 1000nm with FWHM of 20nm.

AS72651 is the main device with the smart interface to a microcontroller. The microcontroller gets the sensors data including AS72652 and AS72653 through AS72651 AT commands or I^2C registers. AS72651 requires a flash memory to work with and the flash memory contains AS7265x Multispectral Chipset firmware.

Each AS72651, AS72652, or AS72653 is packaged in 20-pin LGA package.

Figure 1. AS7265x Multispectral Chipset Optical Filters

Device	Channel	Filter Type	Center λ (nm)	FWHM (nm)
AS72653	A	Gaussian/BP	410	20
AS72653	B	Gaussian/BP	435	20
AS72653	C	Gaussian/BP	460	20
AS72653	D	Gaussian/BP	485	20
AS72653	E	Gaussian/BP	510	20
AS72653	F	Gaussian/BP	535	20
AS72652	G	Gaussian/BP	560	20
AS72652	H	Gaussian/BP	585	20
AS72651	R	Gaussian/BP	610	20
AS72652	I	Gaussian/BP	645	20
AS72651	S	Gaussian/BP	680	20
AS72652	J	Gaussian/BP	705	20
AS72651	T	Gaussian/BP	730	20
AS72651	U	Gaussian/BP	760	20
AS72651	V	Gaussian/BP	810	20
AS72651	W	Gaussian/BP	860	20
AS72652	K	Gaussian/BP	900	20
AS72652	L	Gaussian/BP	940	20

Figure 2. Typical Spectral Responsivity

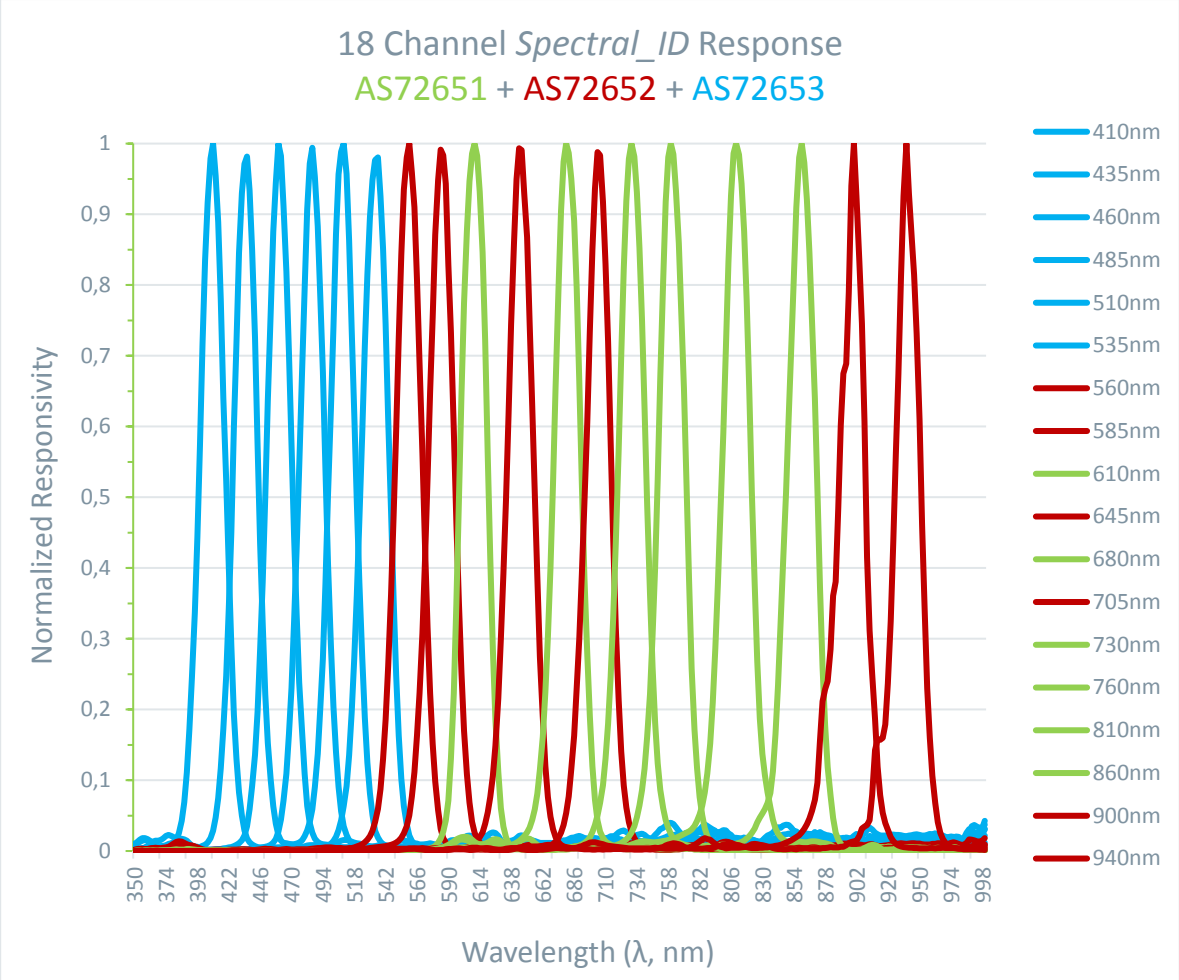

3 Hardware Design Considerations

3.1 Pin Description

Figure 3. Pin Description

Pin	AS72651		AS72652/AS72653	
	Name	Description	Name	Description
1	SDA_M	Digital Input/Output; I²C Master Data	NC	No Connect
2	RESN	Digital Input; Reset, Active Low	Same as AS72651	
3	SCK	Digital Output; SPI Serial Clock	NC	No Connect
4	MOSI	Digital Input/Output; SPI MOSI	NC	No Connect
5	MISO	Digital Input/Output; SPI MISO	NC	No Connect
6	CSN_EE	Digital Output; Chip Select for Flash Memory	NC	No Connect
7	CSN_SD	Digital Output; Chip Select for SD Card	NC	No Connect

Pin	AS72651		AS72652/AS72653	
	Name	Description	Name	Description
8	I²C_ENB	Digital Input; Interface Selection	NC	No Connect
9	INT	Digital Output; Interrupt active Low	SCL_S	I²C Slave
10	NC	No Connect	SDA_S	I²C Slave
11	RX/SCL_S	Digital Input; Interface Pin	NC	No Connect
12	TX/SDA_S	Digital Input/Output; Interface Pin	NC	No Connect
13	ADDR	Digital Output (Open Drain); Set Address	NC	No Connect
14	VDD2	Voltage Supply;	Same as AS72651	
15	LED_DRV	Analog Output; LED Driver Output	Same as AS72651	
16	GND	Supply; Ground	Same as AS72651	
17	VDD1	Voltage Supply;	Same as AS72651	
18	LED_IND	Analog Output; LED Driver for Indicator	Same as AS72651	
19	NC	No Connect	Same as AS72651	
20	SCL_M	Digital Output; I²C Master Clock	NC	No Connect

3.2 Typical Schematic

The typical schematic in Figure 4 shows AS72651, AS72652, and AS72653 connections. The supply voltage to AS72651, AS72652, and AS72653 should be 3.3V ± 10%.

Either UART interface or I²C interface can be used by the controller to get the sensors data.

Figure 4. Typical Schematic

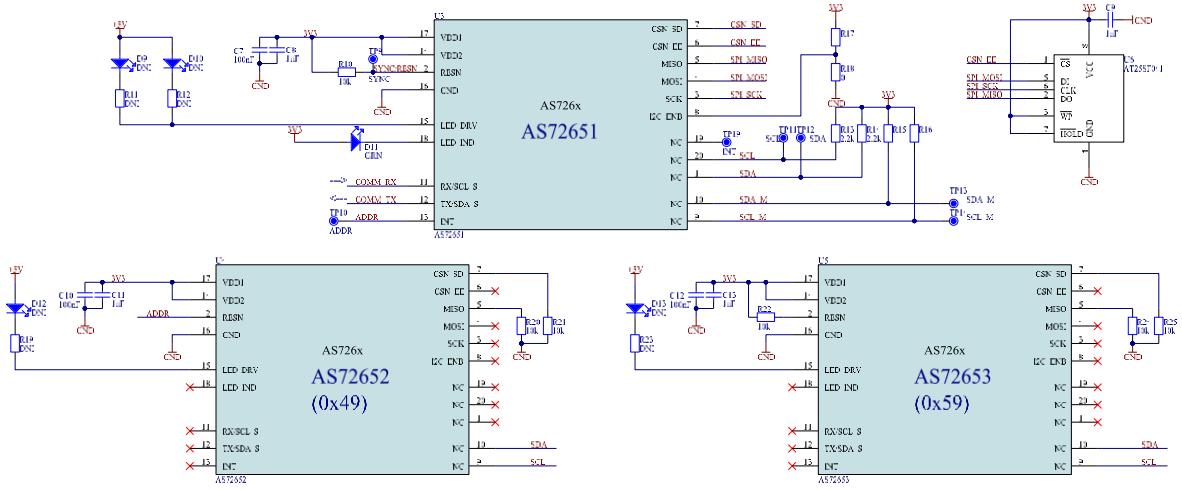

3.3 UART Interface

AS72651 has an UART interface to communicate to the controller. AT commands can be used for data acquisition, sensors configuration, and LED drivers control. Please refer to AS72651 data sheet for complete AT commands.

Pin11 of AS72651 is the RX of UART, which AS72651 receives the information from the controller. Pin12 of AS72651 is the TX of UART, which AS72651 transmits the information to the controller. Any Windows terminal application with baud rate 115200, 8 data bit, 1 stop bit, and none parity can be used for AT commands.

Since pin11 and pin12 of AS72651 are also shared with I²C interface, the pin8, I²C_ENB, has to be pulled down for UART interface configuration.

3.4 I²C Interface

AS72651 has both I²C master and I²C slave interface. Both support I²C fast mode (400 KHz) and standard mode (100 KHz).

AS72651 I²C slave interface is used for communication to the controller. The pin11, SCL_S, is assigned to the I²C bus clock and the pin12, SDA_S, is for the bus data. The pin8, I²C_ENB, has to be pulled HIGH.

AS72651 I²C master interface is used for controlling AS72652 and AS72653. The pin20, SCL, is the I²C bus clock and the pin1, SDA, is for the I²C bus data. The communication between AS72651 and AS72652/AS72653 is managed by the firmware.

According to I²C specification, both SCL and SDA are open drain and need to be connected to a positive supply voltage via a pull-up resistor. The pull-up resistors, R13/R14 in the typical schematic, pull the line high when it is not driven low by the open drain interface. The maximum value of the pull-up resistor is limited by the bus capacitance, C_b, and the rise time, t_r, as below.

$$R_{P(max)} = \frac{t_r}{(0.8473 * C_b)}$$

The bus capacitance is the total capacitance of wire, connections, and pins. I²C Bus specifies the maximum rise time is 300ns.

On the other hand, the minimum value of the pull-up resistor depends on the device logical specifications and allows V_{OL} level to be read as a valide logical low.

$$R_{P(min)} = \frac{V_{DD} - V_{OL(max)}}{I_{OL}}$$

For the AS7265x Multispectral Chipset application with 3.3V supply voltage, 0.4V maximum V_{OL}, and the specified minimum sink current of 3mA for standard mode (100 KHz) or fast mode (400 KHz), the minimum pull-up resistor value is 966.7Ω.

Then the decision of the pull-up resistor value would be based on the rise time, the total bus capacitance, and the power budget. A smaller resistor may get short rise time but has higher power consumption.

Please note, the typical schematic here is configured as UART interface by default so there are no pull-up resistors on AS72651 I²C slave interface. If I²C slave interface is needed, please add the pull-up resistors on either the controller side or on AS72651 I²C interface.

3.5 Light Source Selection

Figure 5. Generic Application

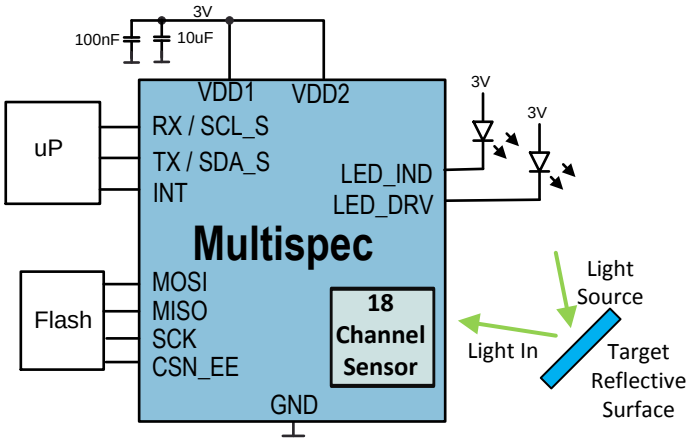

Figure 5 shows AS7265x Multispectral Chipset generic application. AS7265x chipset produce the sensor output data based on the received reflection light rays from the target. The light source selection would be dependent on the spectral responsivity of reflected light and characteristics of the target. For example, if the target is expected to absorb 610nm light in visible range and the application needs to distinguish the target from others, a broadband white LED might be used as the light source for AS7265x and AS7265x 610nm channel should be checked. Various applications may require different light sources.

3.6 Other Connections

The AS72651 device needs a flash memory to store the firmware and the data. The flash memory should be at least 2-Mbits operating at SPI mode 0 with byte write supported. With CSN_SD pin and RESN pin, AS72651 supports various flash memory programming methodologies. Please refer to Application Note “AS726x Firmware Program & Update Methodology”. The recommended flash memory is AT25SF041 from adesto Technologies.

The LED, D11 in the typical schematic, is recommended for debugging purpose. During AS72651 power up, D11 should be on for a short time and off. If D11 is blinking, it indicates there is an issue with accessing the flash memory content.

The AS72651/AS72652/AS72653 devices require a 3.3V supply on both VDD1 and VDD2 pins associated with the decoupling capacitors, C7/C8, C10/C11, and C12/C13 in the schematic. Each LED_DRV pin on AS72651/AS72652/AS72653 can drive external LED sources with various amount of sink currents. The LED current can be configured as 12.5mA, 25mA, 50mA and 100mA.

3.7 PCB Layout Considerations

AS72651/AS72652/AS72653 has same 20-pin LGA package sharing same PCB footprint.

Figure 6. AS72651/AS72652/AS72653 PCB Footprint Recommendation

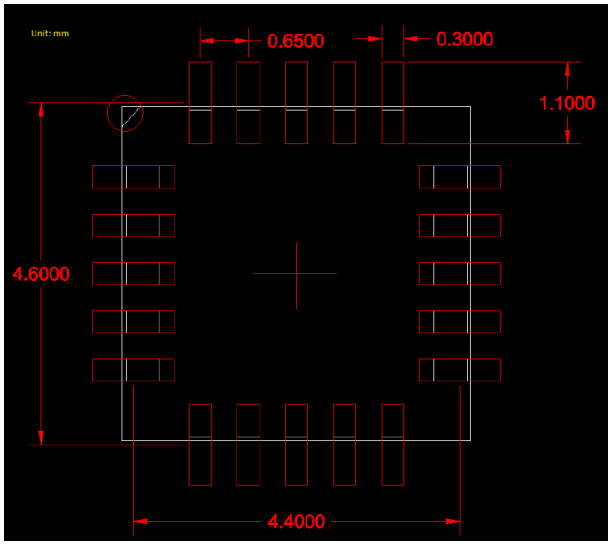

The schematic symbol and PCB layout footprint can also be provided in Altium Design format. Please contact **ams** support team to get the library file.

The PCB layout for AS72651/AS72652/AS72653 devices is simple. The first recommendation is to place the decoupling capacitors closed to VDD pins of AS72651/AS72652/AS72653 devices. The second recommendation is to avoid to put any via underneath the device. Please refer to the Figure below.

Figure 7. Sample Layout of AS72651/AS72652/AS72653 Devices

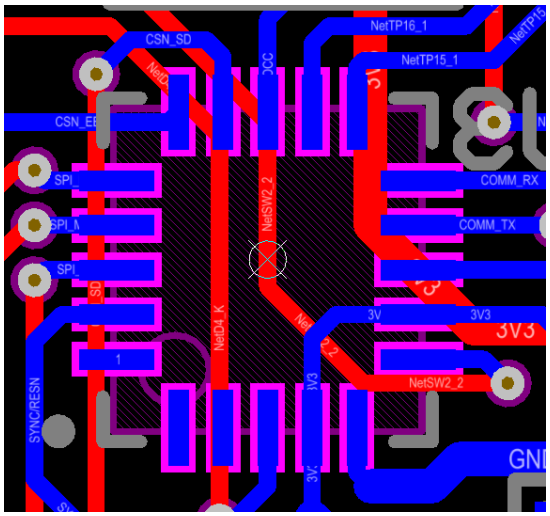

For the system level layout consideration, the generic PCB layout rules for digital designs should apply. In general, the wiring must be chosen so that crosstalk and interference to/from the bus lines is minimized. The I²C bus specification also recommends that place VDD and/or GND between SDL and SDA if the traces are longer than 10cm.

The length of I²C bus depends on the load of the bus and the speed you run at. The I²C bus specification defines the maximum capacitance of the bus is 400pF. This bus capacitance limit is

specified to limit rise time reductions and allow operating at the rated frequency. In general, with lower frequency and/or lower capacitance of the bus, you can have longer bus length.

For most of I²C bus designs, the capacitance limit should be not the problem at all. If you design involves some unusual conditions, the specification has several strategies to cope with excess bus capacitance. For example, higher drive outputs, bus buffers, switched pull-up circuit etc. Please refer to the specification Section 7.2.

3.8 Optic Considerations

Figure 8. Aperture

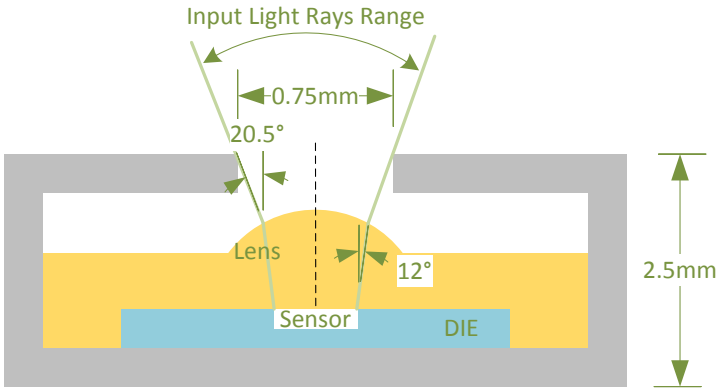

Each AS7265x device has an open aperture on the surface. The diameter is 0.75mm and the package field of view is ±20.5°. The light rays in the range as shown in above figure would arrive at the sensor.

Since AS7265x Multispectral Chipset consists of three AS7265x devices, an external optical device might be needed so incident rays to each device is same.

As an open-aperture device, precautions must be taken to avoid particulate or solvent contamination as a result of any manufacturing processes, including pick and place, reflow, cleaning, integration assembly and/or testing.

4 Software Design Considerations

In most of system designs, AS72651 is controlled by a microcontroller. With the UART interface, the controller could configure the devices and get the sensors data through some AT commands. The software of microcontroller design would be simple.

The following sections would focus on I²C interface and the software of microcontroller design should satisfy both I²C specification and AS7265x Multispectral Chipset register structure.

4.1 Features and Register Structure

AS72651 supports I²C both standard mode and fast mode. The addressing mode is 7+1-bit so when the controller send a read command to AS72651, the salve address plus R/W bit should be 0x93 and when sending a write command, it should be 0x92. Both read and write are single byte process.

AS72651 does not support the slave clock stretching mode.

AS72651 has only three hardware based registers, STATUS (0x00), WRITE (0x01), and READ (0x02). The rest are implemented as virtual registers in the firmware. All virtual registers are accessed through WRITE and/or READ registers. Please refer to the data sheets for complete set of virtual registers.

4.2 I²C Virtual Register Read

To read an I²C virtual register, please follow the flow chart below.

Figure 9. Flow Chart for Virtual Register Read

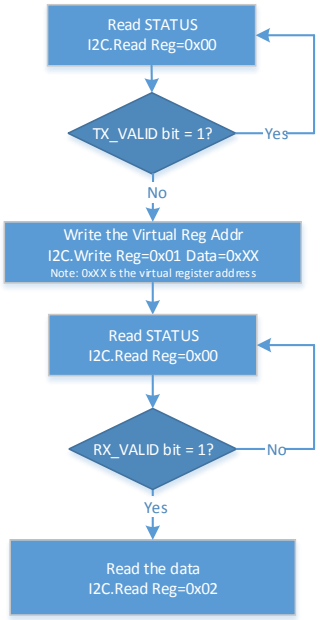

To poll the STATUS register, the controller should write the STATUS address then following a read command to get the value of the STATUS register. The Figure 3 shows the format of the command for polling the STATUS register.

Figure 10. Command for Polling the STATUS Register

Start	0x92	STATUS	Ack	Repeat Start	0x93	Data	Nack	Stop

To write the virtual register address, please program WRITE register with the virtual register address as the following format.

Figure 11. Command for Writing the Virtual Register Address for Reading

Start	0x92	WRITE	Ack	Virtual Reg Addr	Ack	Stop

Finally below is the reading command to get the data.

Figure 12. Command for Reading the READ register

Start	0x92	READ	Ack	Repeat Start	0x93	Data	Nack	Stop

Figure 13. Sample Code of Reading a Virtual Register

```
#define I2C_AS72XX_SLAVE_STATUS_REG     0x00
#define I2C_AS72XX_SLAVE_WRITE_REG      0x01
#define I2C_AS72XX_SLAVE_READ_REG       0x02
#define I2C_AS72XX_SLAVE_TX_VALID       0x02
#define I2C_AS72XX_SLAVE_RX_VALID       0x01

uint8_t i2cm_AS72xx_read(uint8_t virtualReg)
{
	volatile uint8_t status, d ;

	while (1)
	{
		// Read slave I2C status to see if we can write the reg address.
		status = i2cm_read(I2C_AS72XX_SLAVE_STATUS_REG) ;

		if ((status & I2C_AS72XX_SLAVE_TX_VALID) == 0)
			// No inbound TX pending at slave.  Okay to write now.
			break ;
	}
	// Send the virtual register address
	i2cm_write(I2C_AS72XX_SLAVE_WRITE_REG, virtualReg) ;

	while (1)
	{
		// Read the slave I2C status to see if our read data is available.
		status = i2cm_read(I2C_AS72XX_SLAVE_STATUS_REG) ;

		if ((status & I2C_AS72XX_SLAVE_RX_VALID) != 0)
			// Read data is ready for us.
			break ;
	}
	// Read the data to complete the operation.
	d = i2cm_read(I2C_AS72XX_SLAVE_READ_REG) ;
	return d ;
}
```

4.3 I²C Virtual Register Write

Writing to a virtual register is similar to the read.

Figure 14. Flow Chart for Virtual Register Write

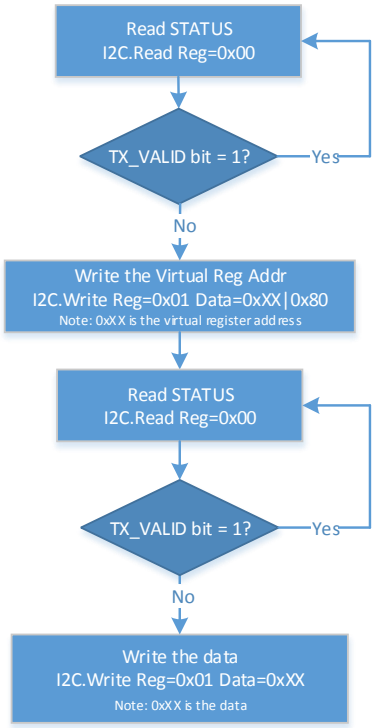

Please refer to the previous section for polling the STATUS register.

Writing the virtual register address for writing is not same as the one for reading. The MSB of the virtual register address has to be set to 1 for writing.

Figure 15. Command for Writing the Virtual Register Address for Writing

Start	0x92	WRITE	Ack	Virtual Reg Addr | 0x80	Ack	Stop

Simple command for writing the data as below.

Figure 16. Command for Writing the Data

Start	0x92	WRITE	Ack	Data	Ack	Stop

Figure 17. Sample Code of Writing a Virtual Register

```
void i2cm_AS72xx_write(uint8_t virtualReg, uint8_t d)
{
	volatile uint8_t	status;

	while (1)
	{
		// Read slave I2C status to see if we can write the reg address.
		status = i2cm_read(I2C_AS72XX_SLAVE_STATUS_REG);

		if ((status & I2C_AS72XX_SLAVE_TX_VALID) == 0)
```

```
                // No inbound TX pending at slave.  Okay to write now.
                break ;
        }
        // Send the virtual register address
        // (setting bit 7 to indicate a pending write).
        i2cm_write(I2C_AS72XX_SLAVE_WRITE_REG, (virtualReg | 0x80)) ;

        while (1)
        {
                // Read the slave I2C status to see if we can write the data byte.
                status = i2cm_read(I2C_AS72XX_SLAVE_STATUS_REG) ;

                if ((status & I2C_AS72XX_SLAVE_TX_VALID) == 0)
                        // No inbound TX pending at slave.  Okay to write data now.
                        break ;
        }
        // Send the data to complete the operation.
        i2cm_write(I2C_AS72XX_SLAVE_WRITE_REG, d) ;
}
```

5 Contact Information

Buy our products or get free samples online at:

www.ams.com/ICdirect

Technical Support is available at:

www.ams.com/Technical-Support

Provide feedback about this document at:

www.ams.com/Document-Feedback

For further information and requests, e-mail us at:

ams_sales@ams.com

For sales offices, distributors and representatives, please visit:

www.ams.com/contact

Headquarters
ams AG
Tobelbader Strasse 30
8141 Premstaetten
Austria, Europe

Tel: +43 (0) 3136 500 0
Website: www.ams.com

6 Copyrights & Disclaimer

Copyright ams AG, Tobelbader Strasse 30, 8141 Premstaetten, Austria-Europe. Trademarks Registered. All rights reserved. The material herein may not be reproduced, adapted, merged, translated, stored, or used without the prior written consent of the copyright owner.

Information in this document is believed to be accurate and reliable. However, ams AG does not give any representations or warranties, expressed or implied, as to the accuracy or completeness of such information and shall have no liability for the consequences of use of such information.

Applications that are described herein are for illustrative purposes only. ams AG makes no representation or warranty that such applications will be appropriate for the specified use without further testing or modification. ams AG takes no responsibility for the design, operation and testing of the applications and end-products as well as assistance with the applications or end-product designs when using ams AG products. ams AG is not liable for the suitability and fit of ams AG products in applications and end-products planned.

ams AG shall not be liable to recipient or any third party for any damages, including but not limited to personal injury, property damage, loss of profits, loss of use, interruption of business or indirect, special, incidental or consequential damages, of any kind, in connection with or arising out of the furnishing, performance or use of the technical data or applications described herein. No obligation or liability to recipient or any third party shall arise or flow out of ams AG rendering of technical or other services.

ams AG reserves the right to change information in this document at any time and without notice.

7 Revision Information

Changes from previous version to current revision 1-03 (2017-Mar-15)	Page
Updated Figure 2	4
Added Light Source Selection and Optic Considerations	7, 9

Note: Page numbers for the previous version may differ from page numbers in the current revision.
Correction of typographical errors is not explicitly mentioned.